LEARNING MATERIAL

SEMESTER & BRANCH: 4TH SEMESTER CIVIL ENGINEERING

THEORY SUBJECT: STRUCTURAL DESIGN-(TH-1)

NAME OF THE FACULTY: Er. SUJATA DALEI

&

Er. BABITA SAHU

1st chapter

27 April 2021

R.C.C (Reinforced cement concrete) :-

- It is the mixture of cement coarse Aggregate, fine aggregate steel bar & water within proportional limit.
- Reinforced Concrete also called reinforced cement concrete.
- A composite materials in which concrete relatively low tensile strength & ductility are compensated by the inclusion of reinforcement having higher tensile strength & ductility.

Objectives of design & detailing

Every structure must be designed to satisfy 3 basic requirement.

1) Stability :- To prevent overturning, sliding or buckling of the structure or parts of it under the action of loads.

(2) Strength :- To resist safely the stresses induced by the loads in the various structural members.

3) Serviceability :- To ensure satisfactory performance under service load conditions which implies providing adequate resistance against deflection crack, width

& vibrations with in acceptable limits & also providing impermeability, durability etc.

Advantages of R.C.C

The following are the major advantages of R.C.C

- Reinforced concrete has good compressive stress because of concrete.
- RCC also has high tensile stress because of steel.
- It has good resistance to damage by fire & weathering.
- RCC protects steel bars from buckling & twisting at the high temperature.
- RCC prevent steel from rusting.
- RCC is durable.

Disadvantages of RCC :-

(1) The tensile strength of reinforced concrete is about tenth of its compressive strength.

(2) The main steps of using reinforced concrete are mixing, casting & curing. All of these affect the final strength.

(3) The cost of forme used for casting is relatively higher.

(4) Shrinkage causes crack development & strength loss.

Different methods of design :-

(1) Working stress method (W.S.M)
(2) ultimate load method (U.L.M)
(3) Limit state method (L.S.M)

28 April 2021

(1) Working stress method :- (W.S.M)

→ In India, before 1964, most of the structures were designed by working stress method.
→ In working stress method it is assumed that concrete & steel are elastic. At the worst combination of working loads the stresses in materials are not exceeded beyond permissible stresses.

(2) ultimate load method (U.L.M)

→ The second revision of IS 456 Introduced ultimate load method of design. It gave more economical section than W.S.M

(3) Limit state method (L.S.M)

The third revision of IS 456 Introduced Limit state method of design.
→ Limit state method has become very popular & most of the structures are designed by Limit state method now.

28 April 2021 2nd chapter

Working stress Method

Permissible stress :- In working stress method the stresses in materials are not exceeded beyound their permissible value.

permissible stress in concrete :-

Grade of concrete	permissible stress in compression N/mm2 (σ_{cbc})
M20	7 N/mm2
M25	8.5 N/mm2
M30	10 N/mm2

[minimum Grade of concrete = M20]

Grade / Types of steel

(i) Mild steel → Fe 250

(ii) HYSD steel (High yield strength Deformed bar)

→ Fe 415

Grade of steel	(σ_{st}) N/mm2
Fe 250	140 N/mm2
Fe 415	230 N/mm2
Fe 500	300 N/mm2

	FCK
Fe250	250 N/mm2
Fe 415	415 N/mm2

Modular Ratio (m) :-

It is defind as the ratio of modulus of Elasticity steel to modulus of elasticity of concrete.

i.e. $m = \frac{E_s}{E_c}$ $E_s = 2 \times 10^5$ N/mm²

$$m = \frac{280}{3\sigma_{cbc}}$$

σ_{cbc} = permissible stress in concrete.

1Q find modular ratio of M20 grade Concrete?

Sol^n Grade of concrete = M20

$m = \frac{280}{3\sigma_{cbc}}$

$\sigma_{cbc} = 7$ N/mm²

$m = \frac{280}{3 \times 7} = 13.33$

29 April 2021

V.V.I.P Assumption :-

(1) At any crosssection, plane section before bending remain plane after bending

(2) All tensile stresses are taken up by reinforcement & none by concrete.

(3) The stress - strain relationship of steel and concrete under working loads is a straight line.

(4) There exist a perfect bond between steel & concrete.

(5) The modular ratio 'm' has the value $\frac{280}{3\sigma_{cbc}}$, where σ_{cbc} = permissible stress in concrete.

(6) Concrete is assumed to be homogeneous.

Types of beam

(i) singly reinforced beam

(ii) Doubly reinforced beam

singly reinforced beam :-

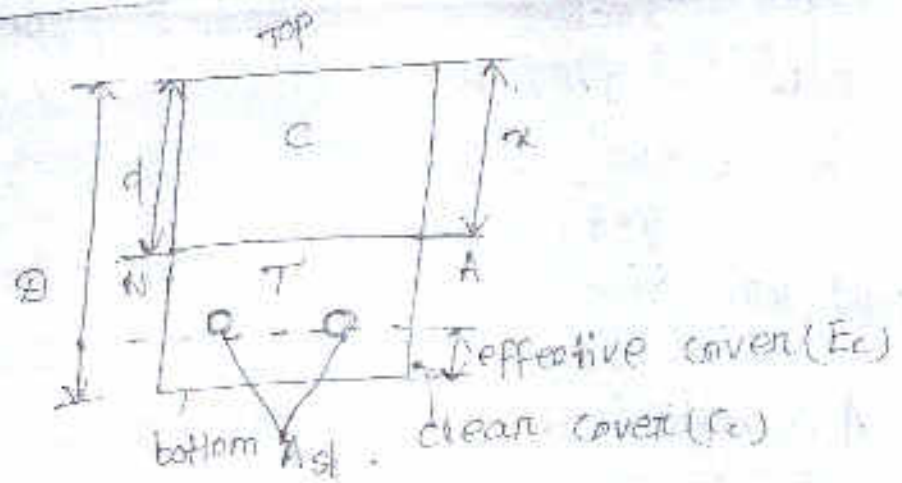

D = overall depth

It is the distance between top fibre to bottom fibre of beam

effective depth (d)

It is the distance between top fibre of beam to centroid of steel bar.

Effective cover (E_c)

It is distance between centroid of bars to bottom of the beam.

Clear cover (C_c)

It is distance between bottom of bar to bottom of beam.

Types of Section

(i) Balance section
(ii) under reinforced section
(iii) over reinforced section

(1) Balance reinforced section :-

When the maximum stresses in steel and concrete simultaneously reach their allowable value, the section is said to be balanced section.

$$\boxed{x = x_{bal}}$$

Area of steel = Area of balance

(2) under reinforced section :-

> When % of steel in a section is less that required for a balanced section. the section is called under reinforced section.

> In this case concrete stress doesn't reach it's maximum allowable value while the stress in steel reached its maximum permissible

$x_{bal} > x$, $A_{st\,bal} > A_{st}$

over reinforced section :-

when the % of steel in a section is more than that required for a balance section, the section is called over reinforced section.

> In this case the stress in concrete reaches its maximum allowable value earlier than that in steel.

$x_{bal} < x$, $A_{st\,bal} < A_{st}$

30 April 2021

Derivation of formula for balance section :-

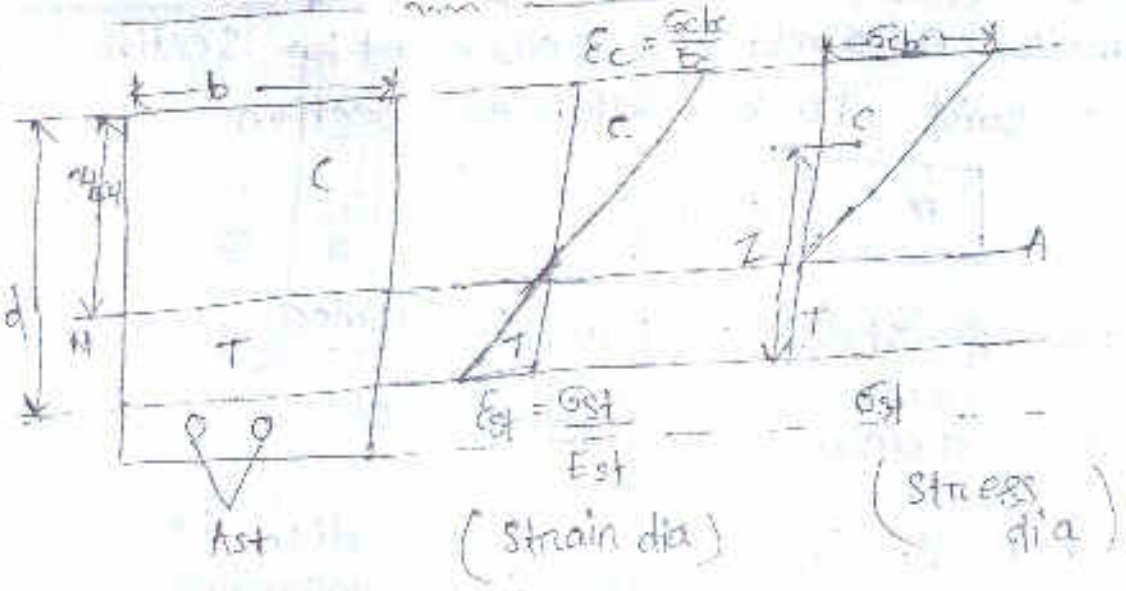

$A_{st\,bal}$ = Area of steel in balance section

σ_{cbc} = permissible stress in concrete in compression.

σ_{st} = permissible stress in steel in tension.

E_c = Modulus of elasticity of concrete.

E_{st} = Modulus of elasticity of steel.

z = lever Arm

It is defind as the distance between centroid of compression force to centroid of tensile force.

b = width of the beam.

x = N.A depth

To find neutral Axis

From the strain dia $\frac{x_{bal}}{d - x_{bal}} = \frac{\sigma_{cbc} / E_c}{\sigma_{st} / E_{st}}$

$$\Rightarrow \frac{x_{bal}}{d - x_{bal}} = \frac{\sigma_{cbc}}{E_c} \times \frac{E_s}{\sigma_{st}}$$

$$\Rightarrow \frac{x_{bal}}{d - x_{bal}} = \frac{\sigma_{cbc}}{\sigma_{st}} \times \frac{E_s}{E_c}$$

$$\Rightarrow \frac{x_{bal}}{d - x_{bal}} = \frac{\sigma_{cbc}}{\sigma_{st}} \times m$$

$$\Rightarrow \frac{x_{bal}}{d - x_{bal}} = \frac{m\sigma_{cbc}}{\sigma_{st}}$$

$$\Rightarrow x_{bal}(\sigma_{st}) = (d - x_{bal})\, m\sigma_{cbc}$$

$$\Rightarrow x_{bal}(\sigma_{st}) = d\, m\sigma_{cbc} - x_{bal}\, m\sigma_{cbc}$$

$$\Rightarrow x_{bal}\, \sigma_{st} + x_{bal}\, m\sigma_{cbc} = m\sigma_{cbc}\, d$$

$$\Rightarrow x_{bal}\, (\sigma_{st} + m\sigma_{cbc}) = m\sigma_{cbc}\, d$$

$$\Rightarrow x_{bal} = \frac{m\sigma_{cbc}\, d}{\sigma_{st} + m\sigma_{cbc}}$$

$$\Rightarrow x_{bal} = \left(\frac{\frac{m\sigma_{cbc}}{m\sigma_{cbc}}}{\frac{\sigma_{st}}{m\sigma_{cbc}} + \frac{m\sigma_{cbc}}{m\sigma_{cbc}}} \right) d$$

$$\Rightarrow x_{bal} = d\left(\frac{1}{1+\frac{\sigma_{st}}{m\sigma_{cbc}}} \right)$$

$$\boxed{x_{bal} = kd}$$

where $k = \frac{1}{1+\frac{\sigma_{st}}{m\sigma_{cbc}}}$

To find out lever Arm (z)

$$z = d - \frac{x_{bal}}{3}$$

$$= d - \frac{kd}{3}$$

$$= d\left(1 - \frac{k}{3}\right)$$

$$= dj$$

$$\boxed{z = dj}$$

where $\boxed{j = 1 - k/3}$

j - Lever Arm constant
k - Neutral Axis "

1 MAY 2021

To find total forces :-

C = Total compression

T = Total tension

$C = T$

$C = \sigma_{cbc} \times \frac{1}{2} \times b \times x_{bal}$

$$\boxed{C = \frac{\sigma_{cbc} \times b \times x_{bal}}{2}}$$ force in compression zone

$T = \sigma_{st} A_{st\,bal}$

$$\boxed{T = \sigma_{st} \times A_{st\,bal}}$$ force in tension zone.

To find out moment of resistance of the section (MR).

Capacity of a section to resist the moment is known as it's moment of resistance.

MR = Total com. force × LA or total tensile force × LA (which ever is small)

for balanced section C = T so both will have same volume

$MR = (\frac{1}{2} \sigma_{cbc} \times x_{bal} \times b) \times jd$

$= (\frac{1}{2} \times \sigma_{cbc} \times kd \times b)\, jd$

$= (\frac{1}{2} \sigma_{cbc} \times kj)\, bd^2$

$$\boxed{MR = Q_{bal} \times bd^2}$$

where $Q_{bal} = \frac{1}{2} \sigma_{cbc} kj$

Considering tensile forces

FR = total tension × l.A

$$\boxed{MR \text{ or } M_{bal} = \sigma_{st} \, A_{st\,bal} \, jd}$$

To find steel area :-

$M_{bal} = \sigma_{st} \, A_{st} \, jd$

$$\Rightarrow \boxed{A_{st\,bal} = \frac{M_{bal}}{\sigma_{st} \, jd}}$$

$P_{t\,bal}$ (percentage of balance)

$$\boxed{P_{t\,bal} = \frac{50k \, \sigma_{cbc}}{\sigma_{st}}}$$

To design balanced section :-

For a given design moment 'x' 'M', M = M_{bal} ; if wk of the given or assumed

$$\boxed{d = \frac{M_{bal}}{Q_{bal} \, x \, b}}$$

Steel area $A_{st} = A_{st\,bal} = \frac{M}{\sigma_{st} \, jd}$

Q6 Determine the effective depth of the beam section :

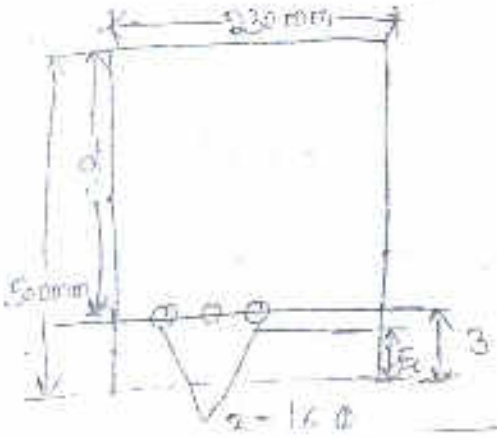

$b = 500$ mm

$d_b = 16$ mm

$d = ?$

$d = D - c_c - \frac{dia}{2}$

$= 500 - 30 - \frac{16}{2}$

$= 500 - 30 - 8 = 462\ mm.$

26 Calculate the design constants for the following mandatee considering the balanced design for singly reinforced section. The materials are grade M20 concrete & mild steel reinforcement.

3 May 2021

Given data :-

For M20 grade concrete $\sigma_{cbc} = 7m$.

Mild steel $= \sigma_{st} = 140\ N/mm^2$

$$m = \frac{280}{3\sigma_{cbc}} = \frac{280}{3 \times 7} = 13.33$$

Neutral Axis constant (K)

$$K = \frac{1}{1 + \frac{\sigma_{st}}{m\sigma_{cbc}}}$$

$$= \frac{1}{1 + \frac{140}{13.3 \times 7}} = 0.4$$

Lever arm constant (j)

$$J = 1 - \frac{K}{3}$$

$$= 1 - \frac{0.4}{3} = 0.87$$

MR Constant (Q_{bal})

$$Q_{bal} = \frac{1}{2} \times \sigma_{cbc} \times k \times j$$

$$= \frac{1}{2} \times 7 \times 0.4 \times 0.87$$

$$= 1.21$$

$$(P_t)_{bal} = \frac{50 \sigma_{bc} k}{\sigma_{st}}$$

$$= \frac{50 \times 7 \times 0.4}{140} = 1$$

Q For a rectangular beam of size 250mm wide × 520 m.m effective depth, find out the balance depth of N.A, balance lever arm, balanced M.R, balanced steel area, the materials are M20 grade concrete & HYSD reinforcement of grade Fe 415

Given data :-

Width of the beam (b) = 250 m.m.

Effective deth (d) = 520 m.m.

For M20 grade concrete $\sigma_{cbc} = 7 N/mm^2$

For Fe415 grade steel $\sigma_{st} = 230 N/mm^2$

Soln (1) To find out Neutral Axis depth (x_{bal})

$$x_{bal} = kd$$

$$k = \frac{1}{1 + \frac{\sigma_{st}}{m \sigma_{cbc}}}$$

$$= \frac{1}{1+\frac{230}{13.33\times 7}}$$

$$M = \frac{280}{3\times 7} = 13.33$$

$$= 0.29$$

$$x_{bal} = kd$$

$$= 0.29 \times 520 = 150.8 \text{ mm}$$

ii) Lever Arm (z)

$$z = dj$$

$$j = 1 - \frac{k}{3}$$

$$= 1 - \frac{0.29}{3} = 0.9$$

$$z = 520 \times 0.9$$

$$= 468 \text{ mm}$$

(iii) Moment of Resistance (MR)

$$MR = Q_{bal} \times bd^2$$

$$Q_{bal} = \frac{1}{2} \times \sigma_{cbc} \times k \times j$$

$$= \frac{1}{2} \times 7 \times 0.29 \times 0.9$$

$$= 0.91$$

$$MR = 0.91 \times 250 \times 520^2$$

$$= 61516 \text{ N.mm}$$

$$= 61.51 \text{ KN.m}$$

$$\boxed{A_{st\,bal} = \frac{p_{t\,bal} \times bd}{100}}$$

$$p_{t\,bal} = \frac{50 \sigma_{bc}\, k}{\sigma_{st}} = \frac{50 \times 7 \times 0.29}{220}$$

$$= 0.44$$

$$A_{st\,bal} = \frac{0.44 \times 250 \times 520}{100}$$

$$= 572\,mm^2$$

Conc. grade	steel grade	σ_{bc}	σ_{st}	k	j	Q_{bal}	P_{bal}
M20	Fe 250	7	140	0.4	0.87	1.21	1
M20	Fe 415	7	230	0.29	0.9	0.91	0.44

Q A simply supported rectangular beam of 4m span carries a uniform distributed load of 26 kN/m. The width of the beam is 230 mm. Find the depth & steel area for the balanced design use M20 grade conc. & mild steel reinforcement.

Given data

span length (l) = 4m

w = 26 kN/m

$$\text{moment} = \frac{wl^2}{8}$$

$$= \frac{26 \times 4^2}{8} = 52\ kNm$$

$$d = \sqrt{\frac{M}{Q_{bal} \times b}}$$

$$= \sqrt{\frac{52 \times 10^6}{1.21 \times 230}} = 432.26 \simeq 432.3\ mm$$

$$\text{steel area } A_{st\,bal} = \frac{M}{\sigma_{st}\, jd}$$

$$= \frac{52 \times 10^6}{140 \times 0.87 \times 432.3}$$

$= 987.57\ mm^2$

$\simeq 988\ mm^2$

$A_{st} = 988\ mm^2$

Assume 5 no of bar 16m·m dia

Area $= 5 \times \frac{\pi}{4} \times 16^2$

$= 1005\ mm^2$

provide 5no of 16m·m dia bar

Assume $C_c = 30$m·m.

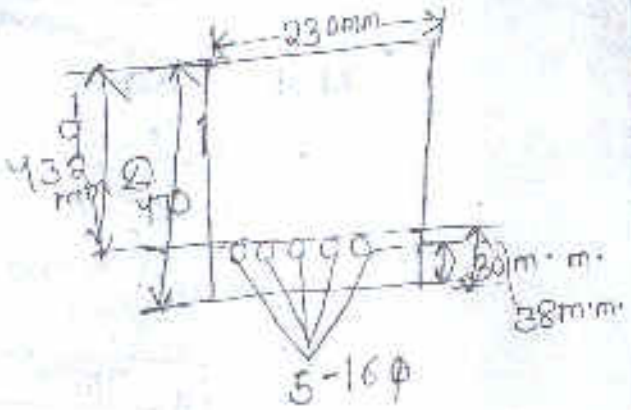

Effective cover

$= \frac{16}{2} + C_c$

$= 8 + 30 = 38$m·m

Overall depth

D = d + Effective cover

$= 432.3 + 38 = 470.3$m·m.

D = 470 m·m.

d = 470 − 38 = 432m·m.

11 MAY 2021

1.Q For a rectangular beam of size 250 mm wide × 520m·m effective depth, Find out the balance depth of n·a, balance lever arm, balanced, m·R balanced steel area, the materials are M25 grade Concrete & HYSD reinforcement of grade Fe250.

Given data:-

Width of beam (b) = 250 m.m

Effective depth (d) = 520 m.m

M_{25} grade concrete σ_{bc} = 8.5 N/mm²

Fe 250 grade steel σ_{st} = 140 N/mm²

(i) Neutral Axis balance

$$m = \frac{280}{3 \times 8.5} = 10.98$$

$x_{bal} = Kd$

$$K = \frac{1}{1 + \frac{\sigma_{st}}{m \sigma_{cbc}}}$$

$$= \frac{1}{1 + \frac{140}{10.98 \times 8.5}}$$

$= 0.39$

$x_{bal} = 0.39 \times 520 = 202.8$ m.m.

(ii) Leaver Arm (z) = dj

$$j = 1 - \frac{K}{3} = 1 - \frac{0.39}{3} = 0.87$$

$z = 0.87 \times 520 = 452.4$ m.

$= \cancel{0.8 \times 520} = 416$ m.

(iii) MR constant (Q_{bal})

$MR = Q_{bal} \times bd^2$

$= \frac{1}{2} \times 8.5 \times 0.39 \times 0.87$

$= 1.44$

$MR = 1.44 \times 250 \times 520^2$

$= 97.34$ N.mm

$= 9734$ N/mm

$$A_{st\,bal} = \frac{p_{t\,bal} \times bd}{100}$$

$$p_{t\,bal} = \frac{50\,b\,c\,k}{f_y}$$

$$= \frac{50 \times 8.5 \times 0.639}{140} = 1.183$$

$$A_{st\,bal} = \frac{1.18 \times 250 \times 520}{100}$$

$$= 1534\ mm^2$$

22 A simply supported rectangular beam of 6m span carries a u.d.l of 36 KN/m. The width of the beam is 230m.m. Find the depth & area for the balanced design use M20 grade concrete & mild steel reinforcement.

Ans Given data:-

span Length = 6mt

u.d.l = 36 KN/m

width of beam = 230 m.m.

$$\text{Moment} = \frac{wl^2}{8}$$

$$= \frac{36 \times 6^2}{8} = 162\ KNm$$

$$d = \sqrt{\frac{M}{Q_{bal} \times b}} = \sqrt{\frac{162 \times 10^6}{1.21 \times 230}} = 762.95\ mm.$$

$$= 762.9\ mm$$

steel area $A_{st\,bal} = \frac{M}{\sigma_{st} j d}$

$= \frac{162 \times 10^6}{140 \times 0.87 \times 762.9}$

$= 1743.41$

$A_{st\,bal} = 1743\ mm^2$

Assume 6 no of bar 20 m.m diametre.

Area $= 6 \times \frac{\pi}{4} \times 20^2$

$= 1884.9\ mm^2$

Assume $C_c = 30$ m.m.

Effective cover $= \frac{20}{2} + C_c$

$= \frac{20}{2} + 30 = 40$ m.m

overal depth (D)

$= d +$ Effective ~~depth~~ cover

$= 762.9 + 40$

$= 802.9$ m.m.

$D = 802$ m.m.

$d = 802 - 40 = 762$ m.m.

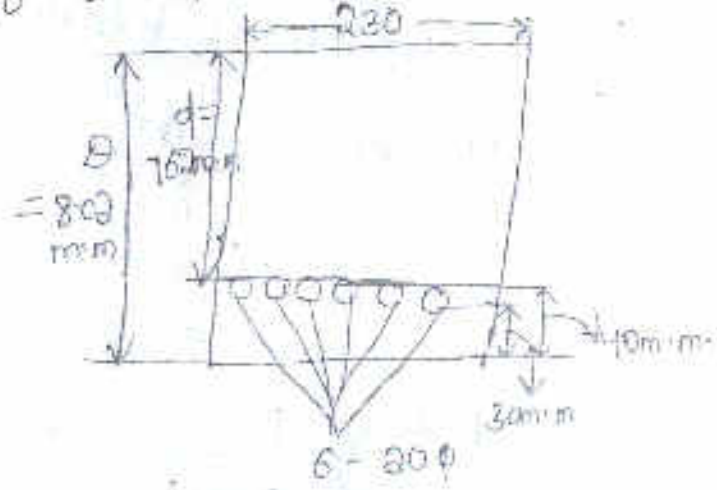

5 May 2021

% of steel (Pt) $= \frac{100\,A_{st}}{bd}$

$= \frac{100 \times 1005}{230 \times 232}$

$= 1.883$

$(P_t)_{bal} = 1$

$P_{tbal} < P_t$

so, it is O.R.S

Transformed Area method

> A transformed section is a section in which the steel area is replaced by an equivalent concrete area.

> A transformed section consist of a single material, therefore theory of simple bending is applied.

> The transformed area may be steel when concrete is replaced steel or it may be concrete when steel is replaced by concrete.

> Hence a transformed section would mean to a homogeneous concrete section.

> 6 May 2021

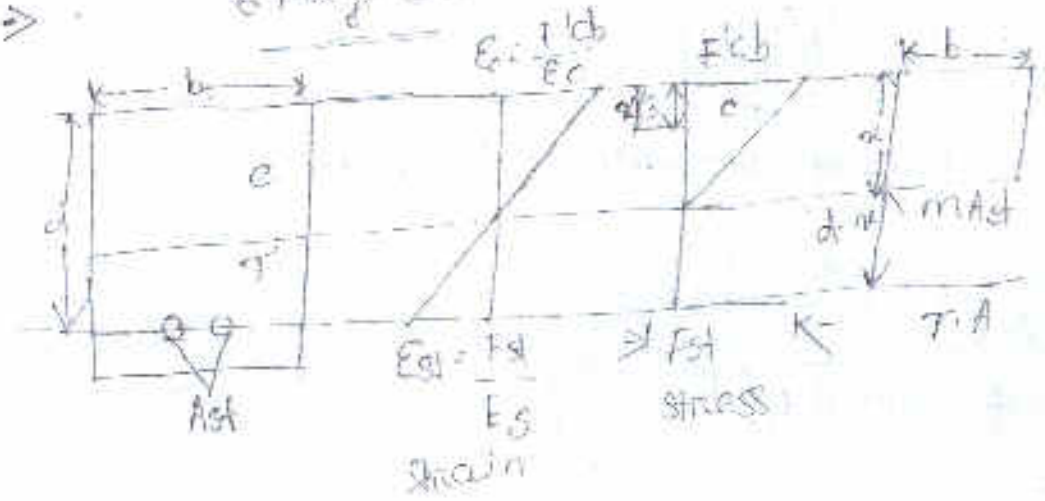

Lever arm

$d - x/3$

$= 460 - \frac{156}{3} = 408$ mm

Stress in steel (f_{st})

$\frac{M}{A_{st} \times (d - x/3)} = \frac{30 \times 10^6}{603 \times 408} = 121.93$ N/mm²

Stress in concrete (f_{cb})

$\frac{f_{st}}{m} \times \frac{x}{d-x}$

$= \frac{121.93}{13.33} \times \frac{156}{460-156}$

$= 4.7$ N/mm²

Moment of Resistance (Comp)

$M.R = \frac{\sigma_{cbc} \cdot b x}{2} \times L.A$

$= \frac{7 \times 200 \times 156}{2} \times 408 = 44553600$ Nmm $\times 10^{-6}$

$= 44.5$ KNm

M.R in tension

$\sigma_{st} f_{st} L.A = 146 \times 603 \times 408 = 34433360$ Nmm

$= 34.43$ KNm

Moment of Resistance of section = 34.43 KNm (The smaller of the above two value)

have 3 no of 16 m·m ϕ bar.

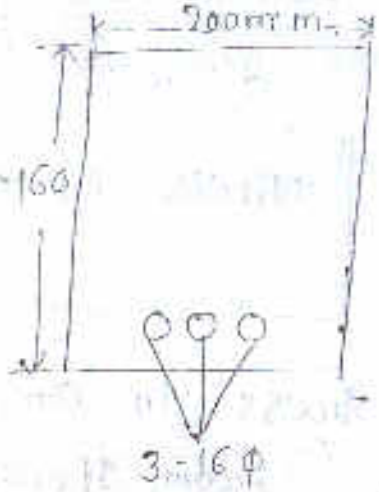

Given data :-

width of beam (b) = 200 m·m

effective depth = 460 m·m.

Moment = 30 kN/m

For M20 grade Concrete σ_{cbc} = 7 N/mm²

For Fe250 grade steel σ_{st} = 140 N/mm²

No of bar = 3

dia of bar = 16 m·m.

$A_{st} = 3 \times \frac{\pi}{4} \times 16^2 = 603 \text{ mm}^2$

Modular ratio $= \frac{280}{3 \times 7} = 13.33$ N/mm²

To find out N.A depth (x)

$b \cdot x \cdot \frac{x}{2} = m A_{st} (d - x)$

$\Rightarrow 200 \times \frac{x^2}{2} = 13.33 \times 603 (460 - x)$

$\Rightarrow 100 x^2 = 13.33 \times 603 (460 - x)$

$\Rightarrow 100 x^2 = 8037 (460 - x)$

$\Rightarrow 100 x^2 = 8037 \times 460 - 8037 x$

$\Rightarrow 100 x^2 = 3697020 - 8037 x$

$\Rightarrow 100 x^2 + 8037 x - 3697020 = 0$

$\Rightarrow x = 156$ m·m

29 A rectangular beam 200m·m wide & 460 m·m effective depth having 3no of 16m·m dia bar. The materials are M20 grade concrete & mild steel check whether the sec is balanced design, U.R design O.R.D.

Sol:

Given data:-

Width of beam = 200m·m

effective depth = 460m·m

$A_{st} = 3 \times \frac{\pi}{4} \times 16^2 = \cancel{408\ mm^2}\ 603\ mm^2$

$m = \frac{280}{3\sigma_{cbc}} = \frac{280}{3 \times 7} = 13.33\ N/mm^2$

$\sigma_{cbc} = 7\ N/mm^2$

$\sigma_{st} = 140\ N/mm^2$

To find out N.A depth (x)

$bx \cdot \frac{x}{2} = m A_{st} (d-x)$

$200 \frac{x^2}{2} = 13.33 \times 603 (460-x)$

$\Rightarrow x = 156 m·m$

To find balanced design N.A

$x_{bal} = Kd = 0.4 \times 460 = 184\ mm$

$x_{bal} = 184 mm$, $x = 156 m·m$

$x_{bal} > x$

$\therefore$ the section is under reinforce section.

8 May 2021

Types of problem

In single reinforced beam, there are two types of problem.

(1) Analysis of the section

(2) Design of the section

Analysis of the section :-

Type -1

To find out the depth of neutral axis for a given section & specifying the type of beam.

Step-1

If the section & actual stresses in the materials are given, find out the depth of neutral axis using equation $\boxed{N.A = b \cdot x \cdot \frac{x}{2} = m A_{st} (d - x)}$

(ii) $\boxed{x_{critical} = Kd}$, $K = \frac{1}{1 + \frac{\sigma_{st}}{m \sigma_{cbc}}}$

(iii) If $x_{actual} < x_{critical}$, then the beam is under reinforce section.

(iv) If $x_{actual} = x_{critical}$, balance section

(v)

Type-2

To find the MR of the given section.

Step-1

(i) Find the depth of N.A.

(ii) Find the depth of critical N.A $x = kd$.

(iii) If $x_{act} < x_{critical}$, the sec^n is under reinforce section.

$$\boxed{MR = A_{st}\,\sigma_{st}\,(d - x/3)}$$

(iv) If $x_{actual} > x_{critical}$, the section is over reinforce section

$$\boxed{MR = b \cdot x\,\frac{\sigma_{cbc}}{2}\,(d - x/3)}$$

Type-3

For the given moment & section of beam to check th stresses.

Q. Determine the position of neutral axis of a reinforced concrete beam 250 mm wide & 400 mm effective depth if the stress developed in concrete & steel are 6.3 N/mm² & 213 N/mm² respectively. The materials are M20 grade concrete & HYSD reinforcement of grade Fe415. Also state the type of beam. Assume 4 no of 16 mm dia bar used.

Soln

Given data:-

Width of the beam = 230 m.m

Effective depth of beam (d) = 460 m.m

no of bar = 4, dia = 16 m.m

$A_{st} = 4 \times \frac{\pi}{4} \times 16^2$

$= 804.24 \, mm^2$

$m = \frac{280}{3\sigma_{cbc}} = \frac{280}{3 \times 7} = 13.33$

For M20 grade concrete $\sigma_{cbc} = 7 \, N/mm^2$

For HYSD bar Fe415, $\sigma_{st} = 230 \, N/mm^2$

Step-1

To find out depth of Neutral axis (x_{actual})

$bx \cdot \frac{x}{2} = mA_{st}(d-x)$

$\Rightarrow 230 \cdot \frac{x^2}{2} = 13.33 \times 804.24 (460 - x)$

$\Rightarrow 115x^2 = 10720.51 (460 - x)$

$\Rightarrow 115x^2 = 4931438.6 - 10720.5x$

$\Rightarrow 115x^2 + 10720.51x - 4931438.6 = 0$

$\Rightarrow x = 165.49 \, m.m$

$x_{act} = 165.5 \, mm$

Step-2

Critical N.A depth

$x_{critical} = Kd$

$$K = \frac{1}{1+\frac{\sigma_{st}}{\sigma_{cbc}}}$$

$= 0.29$

$x_{critical} = 0.29 \times 460$

$= 133.4 \, mm$

$x_{act} = 165.5 \, mm$

$x_{critical} = 133.4 \, mm$

$x_{critical} < x_{actual}$

So the beam is over reinforced section.

Step-3

M.R of the section

$$MR = \frac{1}{2} \sigma_{cbc} \cdot b \cdot x \left(d - x/3\right)$$

$$= \frac{1}{2} \times 7 \times 230 \times 165.5 \left(460 - \frac{165.5}{3}\right)$$

$= 61284594.83 \, Nmm$

$= 61.28 \, kNm$

Q. Find the MR of the beam as shown in figure. Also state wheather the beam is U.R or O.R. The materials used M20 grade concrete & HYSD reinforcement.

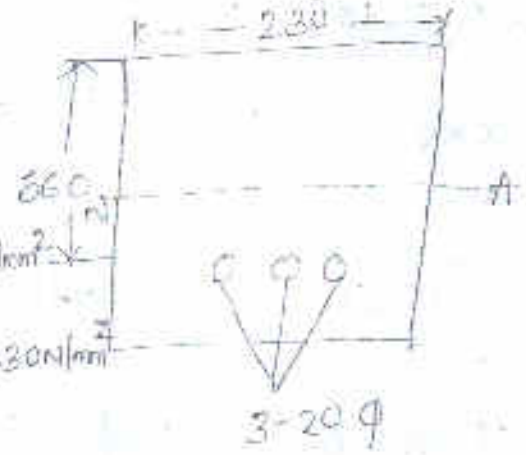

Given data :-

Materials used M20 grade concrete $\sigma_{cbc} = 7 N/mm^2$

HYSD bar Fe415 $\sigma_{st} = 230 N/mm^2$

$A_{st} = 3 \frac{\pi}{4} \times 20^2$

$= 942.47$

Neutral depth axis (x_{actual})

$$b x \frac{x}{2} = m A_{st} (d - x)$$

$$230 \cdot \frac{x^2}{2} = 13.33 \times 942.47 \cdot (560 - x)$$

$$\Rightarrow 115x^2 = 12563.22 (560 - x)$$

$$\Rightarrow 115x^2 = 7035347.2 - 12563.12x$$

$$\Rightarrow 115x^2 + 12563.12x - 7035347.2 = 0$$

$$\Rightarrow x_{actual} = 198.67$$

$$Kd = 0.29 \times 560 = 162.4$$

$x_{act} = 198.6$ m.m

$x_{critical} = 162.4$ mm

$x_{critical} < x_{actual}$

So the beam is over reinforced section.

Moment of Resistance

$$= \frac{1}{2} \sigma_{cbc} \cdot b \cdot x \, (d - x/3)$$

$$= \frac{1}{2} \times 7 \times 230 \times 198.6 \left(560 - \frac{198.6}{3}\right)$$

$= \cancel{8952813.8}$ N/mm $\quad 78945287$ N/mm

$= 78.94$ KN

Q. A simply supported beam of size 230m·m × 600m·m overall depth is reinforced with 4 no of 12m·m dia bar. Find the safe udl on the beam in addition to its self on a span of 4m. The materials are M20 grade concrete & HYSD reinforcement of Fe 415.

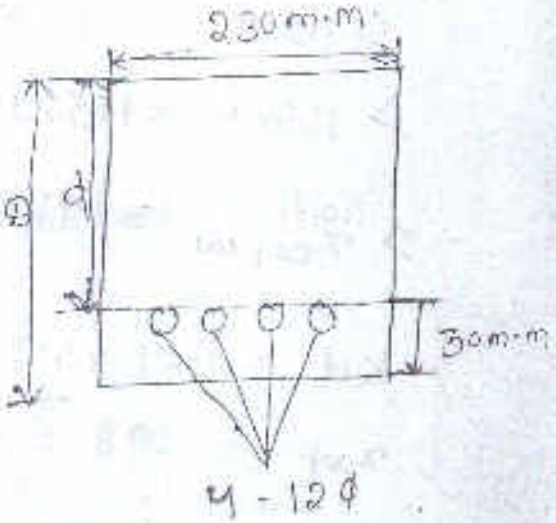

Given data :-

overall depth (D) = 600m·m

width of beam(b) = 230 mm

No of bar = 4, dia = 12m·m

Area of steel (A_{st})

$= 4 \times \frac{\pi}{4} \times 12^2$

$= 452.38 \, mm^2$

M20 grade conc. $\sigma_{cbc} = 7 \, N/mm^2$

HYSD reinforcement, $\sigma_{st} = 230 \, N/mm^2$

Neutral axis depth

Assume $c_c = 30m·m$

$d = 600 - 30 - 6 = 564 \, m·m$

Neutral axis depth x_{actual}

$bx \cdot \frac{x}{2} = m A_{st} (d - x)$

$\Rightarrow 230 \frac{x^2}{2} = 13.33 \times 452 (564 - x)$

$\Rightarrow 115x^2 = 6025.16 (564 - x)$

$\Rightarrow 115x^2 = 3398190.24 - 6025.16x$

$\Rightarrow 115x^2 + 6025.16x - 3398190.24 = 0$

$\Rightarrow x_{act} = 147.7$

Critical depth of N.A ($x_{critical}$)

$x_{critical} = k \times d$

$= 0.29 \times 564$

$= 163.56\,mm$

$x_{act} < x_{critical}$, so the beam is under reinforced section.

Moment of Resistance

$MR = A_{st}\,\sigma_{st}\,(d - x/3)$

$\Rightarrow MR = 452 \times 230$

$= 53.51\ kNm$

Let the load on beam $= w\ kN/m$

$M = \frac{wl^2}{8} = \frac{w \times 4^2}{8}$

$= \frac{w \times 4^2}{8} \times 53.51$

$w = \frac{53.51 \cdot 8}{4^2} = 26.76\ kN/m$

Self wt of the beam $= 0.23 \times 0.6 \times 25$

$= 3.45\ kN/m$

Safe u.d.l $= 26.7 - 3.45 = 23.25$

Q. A simply supported beam over a span of 4.5m is reinforced with tension reinforcement only. The beam is 250mm wide and has an effective depth of 610mm. It is reinforced with 4 no 20mm dia bars. Calculate the stresses in both the materials at the centre of the span when the beam carries a uniformly distributed load of 30 kN/m inclusive of self weight. The materials are M20 grade concrete and HYSD reinforcement of grade Fe415.

Sol: Given data :-

Width of beam (b) = 250mm

effective depth (d) = 610mm.

4 no of bar dia 20mm.

$A_{st} = 4 \times \frac{\pi}{4} \times 20^2$

$= 1256.6 \, mm^2$

M20 grade concrete $\sigma_{cbc} = 7 N/mm^2$

HYSD reinforcement $\sigma_{st} = 230 N/mm^2$

Modular ratio:-

$(m) \frac{280}{3\sigma_{cbc}} = \frac{280}{3 \times 7}$

$= 13.33$

moment $(M) = \frac{wl^2}{8} = \frac{30 \times 4.5^2}{8}$

$= 75.93 \, kNm$

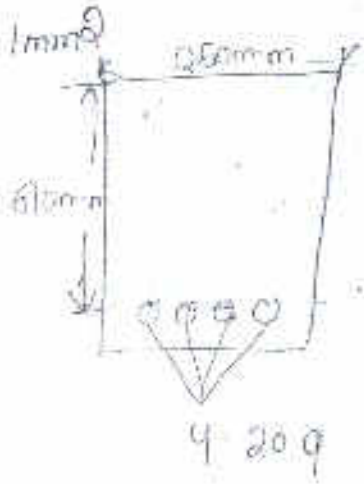

Step- 1

Neutral axis depth (x)

$bx \cdot \frac{x}{2} = mA_{st}(d - x)$

$\Rightarrow 250 \frac{x^2}{2} = 13.33 \times 1256 (610 - x)$

$\Rightarrow 125x^2 = 16742.48 (610 - x)$

$\Rightarrow 125x^2 = 10212912.8 - 16742.48x$

$\Rightarrow 125x^2 + 16742.48x - 10212912.8 = 0$

$x = 226.6$

~~Critical neutral axis~~ depth (~~Critical~~)

~~Critical~~ = ~~kd~~

~~= 0.29 × 610~~

Step-2

Stress in steel $F_{st} = \frac{M}{A_s(d-x/3)}$

$$= \frac{75.93 \times 10^6}{1256\left(610 - \frac{226.6}{3}\right)} = 113.11 \text{ N/mm}^2$$

Stress in concrete (F_{cb})

$$\frac{F_{st}}{m} \times \frac{x}{d-x} = \frac{113.11}{13.33} \times \frac{226.6}{610-226.6}$$

$$= 5.01 \text{ N/mm}^2$$

13 May 2021

Q A rectangular beam 230mm wide × 560mm effective depth is reinforced with 3no of 16mm dia bars calculate the stress in both the materials when a bending moment of 50 kNm is applied The materials are M20 grade concrete & HYSD reinforcement ALSO calculate MR of the section.

Sol^n Given data

width of beam = 230 m.m.

effective depth (d) = 560 m.m.

$A_{st} = 3 \times \frac{\pi}{4} \times 16^2 = 603.18\ mm^2$

M20 grade concrete $\sigma_{cbc} = 7\ N/mm^2$

HYSD reinforcement $\sigma_{st} = 230\ N/mm^2$

$M = 50\ KNm$

$m = \frac{280}{3 \times 7} = 13.33$

step - 1

To find out N.A depth (x)

$b \cdot x \cdot \frac{x}{2} = m A_{st} (d - x)$

$\cancel{230} \cdot \frac{x^2}{\cancel{2}} = 13.33 \times 603.18\ (560 - x)$

$\Rightarrow 115x^2 = 13.33 \times 603.18\ (560 - x)$

$\Rightarrow 115x^2 = 8037.99\ (560 - x)$

$\Rightarrow 115x^2 = 4501274.4 - 8037.99x = 0$

$\Rightarrow 115x^2 + 8037.99x - 4501274.4 = 0$

$\Rightarrow x = 165.9$

step - 2

Stress in steel (fst) $= \frac{M}{A_{st}(d - x/3)}$

$= \frac{50 \times 10^6}{603.18 \times (560 - \frac{165.9}{3})}$

$= 164.2\ N/mm^2$

stress in concrete (f_{cb}) $= \frac{F_{st}}{m} \times \frac{x}{d-x}$

$$= \frac{164.29}{13.33} \times \frac{165.95}{560-165.9}$$

$$= 5.19 \ N/mm^2$$

$x_{critical}$

$x = kd$

$= 0.29 \times 560 = 162.4$ mm

$165 \ x_{act} > x_{critical}$

$\therefore$ The beam is over reinforced section.

so, $MR = \frac{\sigma_{cbc} \cdot b \cdot x}{2} \times d - \frac{x}{3}$

$$= \frac{7 \times 230 \times 165}{2} \times 560 - \frac{165}{3}$$

$$= 67.43 \ KNm$$

A simply supported beam of 6m span carries a u.d.l of 12 kN/m inclusive of self wt. The beam 230 mm wide & the effective depth is 580 mm. Find the steel area, the materials are M20 grade conc. & HYSD reinforcement.

Given data:-

width of beam = 230 mm

Effective depth (d) = 580 m.m

u.d.l = 12 kN/m

span length (L) = 6m

M_{20} grade concrete $\sigma_{cbc} = 7 N/mm^2$

HYSD reinforcement $\sigma_{st} = 230 N/mm^2$

Step-1

$$M = \frac{wl^2}{8} = \frac{12 \times 6^2}{8} = 54 \text{ KNm}$$

$$\text{depth reqd} = \sqrt{\frac{M}{Rbal \times b}}$$

$$\sqrt{\frac{54 \times 10^6}{0.91 \times 230}} = 507 \text{ mm}$$

Actual depth = 580 mm

depth reqd = 507 mm

$580 > 507$

The beam is under reinforce section.

$$M.R = \sigma_{st} A_{st} (d - x/3)$$

$$= 230 \times A_{st} (580 - x/3)$$

$$M = MR$$

$$\Rightarrow 54 \times 10^6 = 230 A_{st} (580 - x/3)$$

$$\Rightarrow \frac{54 \times 10^6}{230} = A_{st}(580 - x/3)$$

$$\Rightarrow 234782.60 = A_{st} (580 - x/3) \quad \text{------} \quad (1)$$

step - 2

To find depth of N.A

$b x \cdot \frac{x}{2} = m A_{st} (d - x)$

$\Rightarrow 230 \frac{x^2}{2} = 13.33 A_{st} (580 - x)$

$\Rightarrow 115 x^2 = 13.33 A_{st} (580 - x)$

$\Rightarrow \frac{115 x^2}{13.33} = A_{st} (580 - x)$

$\Rightarrow A_{st} = \frac{8.627}{580 - x}$ ——— (ii)

substituting in eqn (i)

$234782.60 = A_{st} \times \left(580 - \frac{x}{3}\right)$

$\Rightarrow 234782.60 = A_{st} \left(\frac{1740 - x}{3}\right)$

$\Rightarrow 234782.60 = \left(\frac{8.627 x^2}{580 - x}\right) \times \left(\frac{1740 - x}{3}\right)$

$\Rightarrow 234782.60 = \left(\frac{8.627 x^2}{580 - x}\right) \times \left(\frac{1740 - x}{3}\right)$

17 may 2021

(or)

$MR = \sigma_{st} A_{st} (d - x/3)$

$54 \times 10^6 = 230 \times A_{st} (d - x/3)$

$\Rightarrow 54 \times 10^6 = 230 A_{st} \left(\frac{3d - x}{3}\right)$

$\Rightarrow 54 \times 10^6 = 76.66 A_{st} (3d - x)$

$\Rightarrow \frac{54 \times 10^6}{76.66} = A_{st} (3d - x)$

$= 8.627 = A_{st} (3d - x)$ ——— (i)

Depth of N.A (x)

$$b \cdot x \cdot \frac{x}{2} = m A_{st} (d-x)$$

$$230 \frac{x^2}{2} = 13.33 A_{st} (d-x)$$

$$\Rightarrow \frac{115x^2}{13.33} = A_{st} (d-x)$$

$$\Rightarrow 8.63 x^2 = A_{st} (d-x)$$

$$\Rightarrow A_{st} = \frac{8.63 x^2}{d-x} \quad \text{——— (ii)}$$

Substituting in eqn (1)

$$\Rightarrow 704409.07 = A_{st} (3d-x)$$

$$\Rightarrow 704409.07 = \frac{8.63x^2}{d-x} \times (3d-x)$$

$$\Rightarrow 704409.07 = \frac{8.63x^2}{580-x} \times (3 \times 580 - x)$$

$$\Rightarrow 704409.07 = \frac{8.63x^2}{580-x} \times (1740 - x)$$

$$704409.07 \times (580-x) = (8.63x^2)(1740x)$$

$$\Rightarrow 408557260.16 - 704409.07x = 15016.2x^2 - 8.63x^3$$

$$\Rightarrow 8.63x^3 - 15016.2x^2 - 704409.07x + 408557260.16 = 0$$

$$\Rightarrow x = 149 \text{ mm}$$

$$A_{st} = \frac{8.63x^2}{d-x} = \frac{8.63 \times 149^2}{580-149} = 444.32 \text{ mm}^2$$

Q A simply supported beam 250mm width & 610 overall depth is reinforced with 4no of 20m.m dia bar. find out the depth of N.A & state what type of sec^n. 1180 determine the M.R.

Given data:-

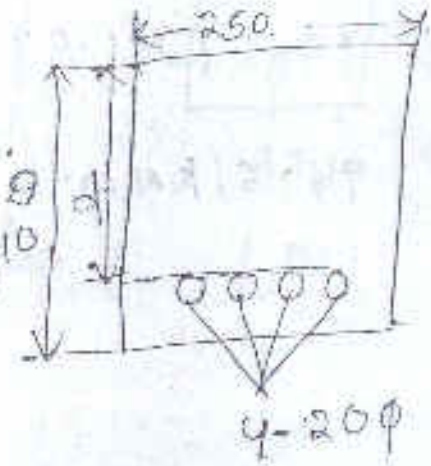

width of beam(b) = 250 m.m

overall depth(D) = 610 m.m.

d = effective cover

= 610 − 40 = 570 m.m

4 no of 20m.m. dia bar

$A_{st} = 4 \times \frac{\pi}{4} \times 20^2$

$= 1256 \, mm^2$

M20 grade $\sigma_{cbc} = 7 N/mm^2$

HYSD reinforcement $\sigma_{st} = 230 N/mm^2$

To find out N.A (x actual)

$b \cdot x \frac{x}{2} = mA_{st}(d-x)$

$\Rightarrow 250 \frac{x^2}{2} = 13.33 \times 1256 (570-x)$

$\Rightarrow 125x^2 = 16742.48 (570-x)$

$\Rightarrow 125x^2 = 9543213.6 - 16742.48x$

$\Rightarrow 125x^2 + 16742.48x - 9543213.6$

$\Rightarrow x_{act} = 217.33$

$x_{critical} = Kd$

$= 0.29 \times 217.33 = 165.3$

So it is overreinforced section.

Moment of Resistance

$\frac{1}{2} \sigma_{cbc} \cdot b \cdot x \left(d - \frac{x}{3}\right)$

$\Rightarrow \frac{1}{2} \times 7 \times 250 \times 217.33 \times \left(570 - \frac{217.33}{3}\right)$

$\Rightarrow 94617241.57$ N/mm

$\Rightarrow 94.61$ KN m. Ans

18 May 2021

Doubly reinforced beam :-

> For a design moment M, If the size of the rectangular beam section is fixed & the moment of resistance of a singly reinforced section is less than M.

> There are two methods to design such beams.

(i) Increase the concrete mix to increase the capacity of the section.

(ii) Reinforcement are provided in compression zone to give additional strength to the concrete in compression, such

beams are called Doubly reinforced beam.

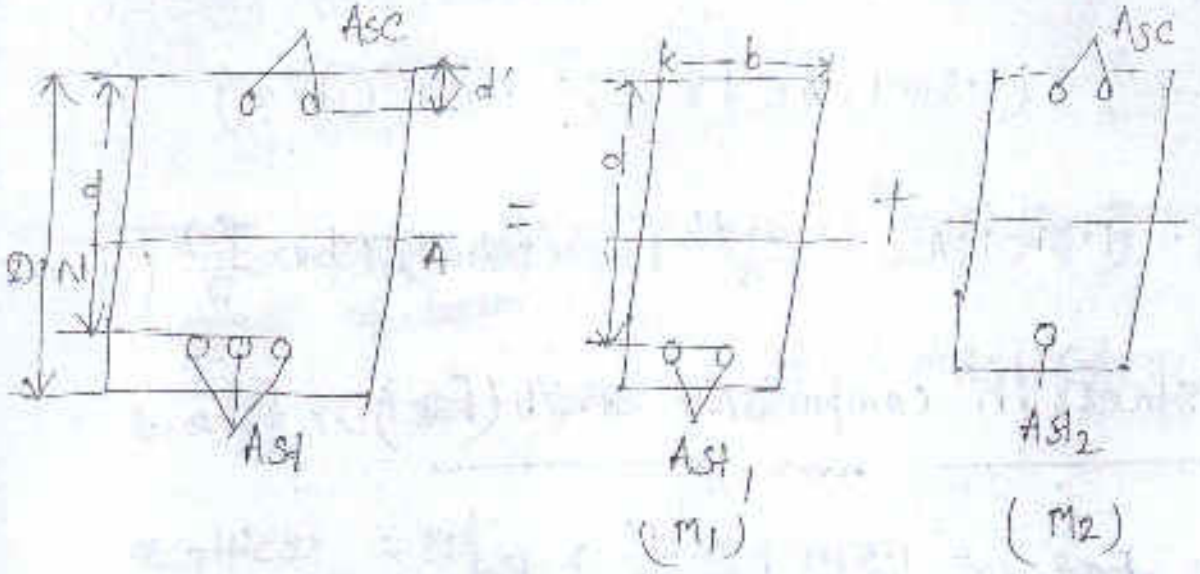

$$\boxed{(\text{Moment})M = M_1 + M_2}$$

$$\boxed{M_2 = (1.5m - 1)\, A_{sc}\, \sigma_{cbc} \left(\frac{x-d'}{x}\right) \times (d-d')}$$

modular ratio

$$\boxed{A_{st} = A_{st1} + A_{st2}}$$

$$\boxed{A_{sc} = \frac{M_2}{(1.5m-1)\,\sigma_{cbc}\left(\frac{x-d'}{x}\right)(d-d')}}$$

$$\boxed{A_{st2} = \frac{M_2}{\sigma_{st}(d-d')}}$$

$$\boxed{A_{st1} = \frac{M_1}{\sigma_{st}\, jd}}$$

* To find out depth of N.A

$$b \cdot x \frac{x}{2} + (1.5m-1) A_{sc} (x-d') = mA_{st} (d-x)$$

$$M = (1.5m-1) A_{sc} \times \frac{x-d'}{x} f_{cb} \times (d-d') + bx \times \frac{f_{cb}}{2} (d-x/3)$$

* Stress in compression steel (f_{sc})

$$F_{sc} = 1.5m \left(\frac{x-d'}{x}\right) f_{cb}$$

* Stress in tensile steel (f_{st})

$$F_{st} = m f_{cb} \left(\frac{d-x}{x}\right)$$

* Find moment of inertia section

$$I_x = \frac{1}{3} bx^3 + (1.5m-1) \times A_{sc} (x-d')^2 + mA_{st} (d-x)^2$$

Stress in concrete (f_{cb}) $= \frac{M \cdot x}{I_x}$

$$F_{sc} = 1.5m \times \frac{M(x-d')}{I_x}$$

$$f_{st} = m \times \frac{M(d-x)}{I_x}$$

19 may 2021

Types of problems

Type -1

To find out the depth of N.A & specify type of beam.

$b \cdot x \cdot \frac{x}{2} + (1.5m - 1) A_{sc} (x - d') - m A_{st} (d - x)$

$x_{critical} = Kd$

(a) If $x_{actual} < x_{critical}$, then the beam is under reinforced section.

(b) If $x_{act} > x_{critical}$, then the beam is over reinforced section.

Type - 2

For given moment & section of beam to check the stresses.

Type -3

To find out the moment of resistance of the section.

(a) $x_{act} > x_{critical}$, over reinforcement

$M \cdot R = M_1 + M_2$

$= \frac{1}{2} \sigma_{cbc}\, b \cdot x (d - x/3) + (1.5m - 1) A_{sc}\, \sigma_{cbc} \times \left(\frac{x - d'}{x}\right)(d - d')$

(b) If $x_{act} < x_{critical}$, under reinforcement

$$\boxed{M \cdot R = A_{st}\, \sigma_{st} (d - y)}$$

$$\bar{y} = \frac{C_1 y_1 + C_2 + y_2}{C_1 + C_2}$$

$y_2 = d'$

$C_1 = \frac{bx}{2} f_{cb}$, $y_1 = x/3$

$C_2 = (1.5m-1) A_{sc} \left(\frac{x-d'}{x}\right) f_{cb}$

(or)

M.R (Compression)

$$\frac{\sigma_{cbc} \times I_x}{x}$$

M.R (tension)

$$\frac{\sigma_{st} \times I_x}{m(d-x)}$$

Type -4 : To design the section

(a) Find $M_1 = Qbd^2$

(b) If $M > M_1$; design as doubly reinforced beam.

(c) Find $A_{st1} = \frac{M_1}{\sigma_{st} jd}$, $A_{st2} = \frac{M_2}{\sigma_{st}(d-d')}$

$$\boxed{A_{st} = A_{st1} + A_{st2}}$$

$$A_{sc} = \frac{M_2}{(1.5m-1)\sigma_{cbc}\left(\frac{x-d'}{x}\right)(d-d')}$$

Depth of N.A, type of beam, stress, MR

16 A rectangular beam is reinforced as shown in fig. Find out the maximum stress in concrete & steel. If it is subjected to a moment 40 kNm. The materials are M20 grade concrete & HYSD reinforcement. Also find out MR of the section.

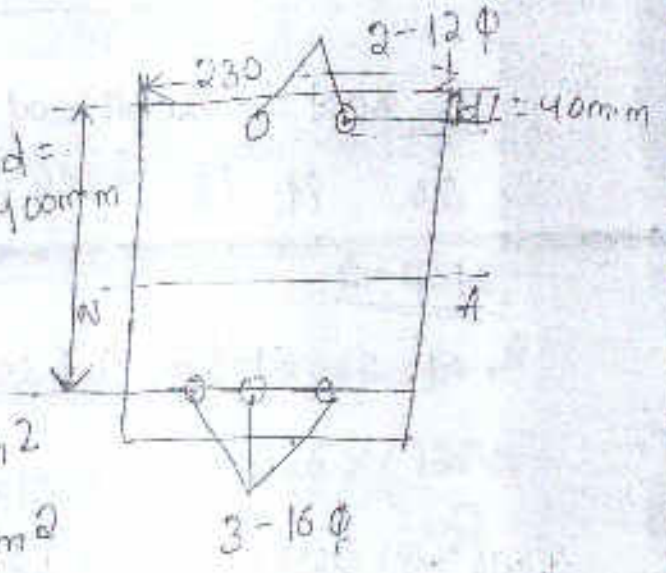

Given data:-

width of beam(b) = 230mm.

Effective depth(d) = 400mm

d' = 40mm.

$A_{sc} = 2 \times \frac{\pi}{4} \times 12^2 = 226\ mm^2$

$A_{st} = 3 \times \frac{\pi}{4} \times 16^2 = 603\ mm^2$

For M20 grade concrete $\sigma_{cbc} = 7\ N/mm^2$

HYSD steel $\sigma_{st} = 230\ N/mm^2$

$m = \frac{280}{3 \times 7} = 13.33$

Step 1

To find out depth of N.A

$b \cdot x \frac{x}{2} + (1.5m-1) A_{sc} (x-d') = m A_{st} (d-x)$

$230 \frac{x^2}{2} + (1.5 \times 13.33 - 1)\, 226 (x-40) = 13.33 \times 603 (400-x)$

$\Rightarrow 115x^2 + 4292.87x(x-40) = 8037.99(400-x)$

$\Rightarrow 115x^2 + 4292.87x - 171714.8 = 3215196 - 8037.99x$

$\Rightarrow 115x^2 + 4292.87x + 8037.99x - 171714.8 + 3215196 = 0$

$\Rightarrow 115x^2 + 12330.86x - 3386910.8 = 0$

$x = 126.18 \text{ m.m}$

$x_{critical} = kd$

$K = 0.29$

$= 0.29 \times 400 = 116 \text{ m.m}$

$x_{act} > x_{critical}$

so it is over reinforced section.

<u>step-2</u>

$M = (1.5m-1) A_{sc}\left(\frac{x-d'}{x}\right) f_{cb}(d-d') + bx \times \frac{f_{cb}}{2}\left(d-\frac{x}{3}\right)$

$42\times10^6 = (1.5\times13.33-1)\,226\left(\frac{126.18-40}{126.18}\right) f_{cb}(400-40)$

$+ 230\times126.18\times\frac{f_{cb}}{2}\left(400-\frac{126.18}{3}\right)$

$\Rightarrow 42\times10^6 = 2931.99\times360 f_{cb} + 29027.4\times\frac{f_{cb}}{2}\times357.94$

$\Rightarrow 42\times10^6 = 1055516.4 f_{cb} + 5193959.95$

$\Rightarrow 42\times10^6 = 6249476.35 f_{cb}$

$$f_{cb} = \frac{42\times10^6}{6249476.35} = 6.72\ N/mm^2$$

Stress in steel in compression

$$f_{sc} = 1.5m\left(\frac{x-d'}{x}\right) f_{cb}$$

$$= 1.5\times13.33\left(\frac{126.18-40}{126.18}\right)\times6.72$$

$$= 91.77\ N/mm^2$$

Stress in steel in tension

$$f_{st} = m f_{cb}\left(\frac{d-x}{x}\right)$$

$$= 13.33\times6.72\times\left(\frac{400-126.18}{126.18}\right)$$

$$f_{st} = 194.39\ N/mm^2$$

(or)

$$I_x = \frac{1}{3}bx^3 + (1.5m-1)A_{sc}(x-d')^2 + mA_{st}(d-x)^2$$

$$= \frac{1}{3}\times230\times126.18^3 + (1.5\times13.33-1)\times226\times(126.18-40)^2$$

$$+ 13.33\times603(400-126.18)^2$$

$$= 788571009\ N/mm^2$$

$$f_{cb} = \frac{M\cdot x}{I_x} = \frac{42\times10^6\times126.18}{788571009} = 6.72\ N/mm^2$$

$$f_{sc} = 1.5m\times\frac{M(x-d')}{I_x} = \frac{1.5\times13.3\times42\times10^6\,(126.18-4}{788571009}$$

$$= 91.8\ N/mm^2$$

$$F_{st} = m \times \frac{M(d-x)}{I_N}$$

$$= \frac{13.33 \times 40 \times 10^6 (400 - 126.18)}{188571009}$$

$$= 194 \, N/mm^2$$

Step-3

$$M.R = M_1 + M_2$$

$$= \frac{1}{2} \sigma_{cbc} \cdot b \cdot x (d - x/3) + (1.5m - 1) A_{sc} \sigma_{cbc} \left(\frac{x - d'}{x}\right)(d - d')$$

$$= \frac{1}{2} \times 7 \times 230 \times 126.18 \times \left(400 - \frac{126.18}{3}\right) + 1.5 \times 13.33 - 1) 226 \times 7 \times \frac{126.18 - 40}{126.18} \Big)(400 - 40)$$

$$= 43746355.24 \, Nmm$$

$$= 43.74 \, kNm$$

21 May 2021

Q6 A rectangular beam is reinforced as shown in fig. Find out the M.R of the section. The materials are M20 grade concrete & HYSD reinforcement of grade Fe415.

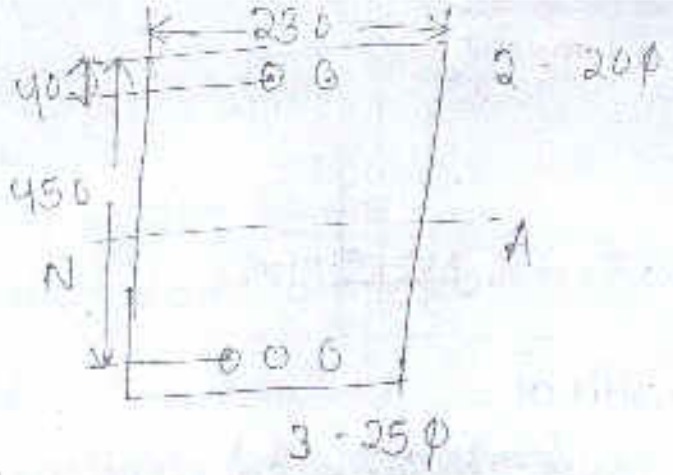

Given data :-

width of the beam = 230 mm

d' = 40 m.m.

Effective depth = 450 m.m.

$A_{sc} = 2 \times \frac{\pi}{4} \times 20^2 = 628 \text{ mm}^2$

$A_{st} = 3 \times \frac{\pi}{4} \times 25^2 = 1472 \text{ mm}^2$

For M20 grade Conc. $\sigma_{cbc} = 7 N/mm^2$

HYSD steel $\sigma_{st} = 230 N/mm^2$

$m = \frac{280}{3 \times 7} = 13.33$

Step-1

To find out N.A

$b \cdot x \frac{x}{2} + (1.5m - 1) A_{sc}(x - d') = m A_{st} (d - x)$

$\Rightarrow 230 \frac{x^2}{2} + (1.5 \times 13.33 - 1) 628.31 (x - 40) = 13.33 \times 1472.62 (450 - x)$

$\Rightarrow 115x^2 + 11934.74 (x - 40) = 19630.02 (45 - x)$

$\Rightarrow 115x^2 + 11934.74x - 477389.6 = 883350.91 - 19630.02x$

$\Rightarrow 115x^2 + 31564.76x - 9310898.6 = 0$

$x_1 = 178.67$ mm

Kd

$0.29 \times 450 = 130.5$ mm.

$x_{act} > x_{critical}$

so it is over reinforced section.

step-2

M.R

$$\frac{1}{2} \times 7 \times 230 \times 178.67 \times \left(450 - \frac{178.67}{3}\right) + (1.5 \times 13.33 - 1) \times 628.31 \times 7 \times \left(\frac{178.67 - 40}{178.67}\right)(450 - 40)$$

$= 82741560.76$ Nmm

$= 82.74$ kNm

3Q A rectangular beam is reinforced as shown in fig. find out the MR of the section. The materials are M20 grade conc. & mild steel reinforcement.

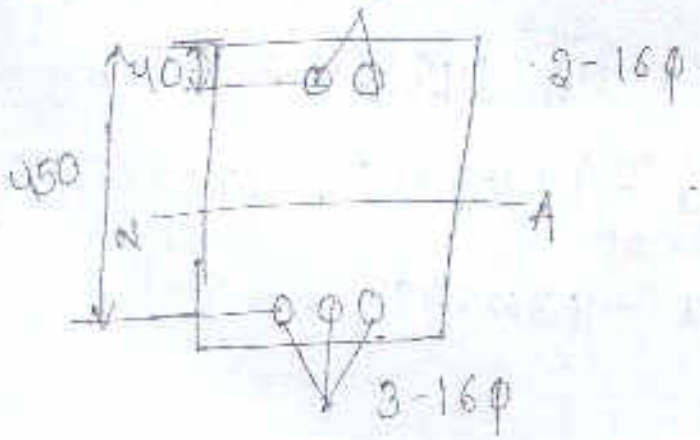

22 May 2021

Given data:-

width of beam (b) = 230 m.m.

Effective depth (d) = 450 m.m

$d' = 40$ m.m.

$A_{sc} = 2 \times \frac{\pi}{4} \times 16^2 = 402.12 mm^2$

$A_{st} = 3 \times \frac{\pi}{4} \times 16^2 = 603 \ mm^2$

M_{20} grade $\sigma_{cbc} = 7 N/mm^2$

mild steel $\sigma_{st} = 140 N/mm^2$

$m = \frac{280}{3 \times 7} = 13.33$

step-1.

To find out N.A

$b \cdot x \cdot \frac{x}{2} + (1.5m - 1) A_{sc} (x - d') = m A_{st} (d - x)$

$\Rightarrow 230 \frac{x^2}{2} + (1.5 \times 13.33 - 1) 402 (x - 40) = 13.33 \times 603 (450 - x)$

$\Rightarrow 115x^2 + 7635.99 (x - 40) = 8037.99 (450 - x)$

$\Rightarrow 115x^2 + 7635.99x - 305439.6 = 3617095.5 - 8037.99x$

$\Rightarrow 115x^2 + 15673.98 - 3922535.1 = 0$

$x_{act} = 128$ m.m.

$x_{critical} = kd = 0.9 \times 450 = 180$ m.m.

$x_{act} < x_{critical}$ so the beam is in under reinforced section.

$MR = A_{st}\,\sigma_{st} \times (d - \bar{y})$

$C_1 = \frac{bx}{2} f_{cb} = \frac{230 \times 128}{2} f_{cb} = 14720 f_{cb}$

$C_2 = (1.5m - 1) A_{sc} \left(\frac{x - d'}{x}\right) f_{cb}$

$= (1.5 \times 13.33 - 1)\,402 \left(\frac{128 - 40}{128}\right) f_{cb}$

$= 5249.74 f_{cb}$

$y_1 = \frac{128}{3} = 42.67$

$y_2 = 40\,mm$

$\bar{y} = \frac{C_1 y_1 + C_2 y_2}{C_1 + C_2} = \frac{14720 f_{cb} \times 42.67 + 5249.74 f_{cb} \times 40}{14720 f_{cb} + 5249.74 f_{cb}}$

$= \frac{628102.4 f_{cb} + 209989.6 f_{cb}}{19969.74 f_{cb}}$

$f_{cb} = \bar{y} = 41.96\,mm$

$MR = A_{st}\,\sigma_{st}\,(d - \bar{y})$

$= 603 \times 140\,(450 - 41.96)$

$= 34\,kNm$

OR

$MR\,(comp) = \frac{\sigma_{cbc} \times I_x}{x} = 5750175.76 = 57\,kN$

$MR\,(tension) = \frac{\sigma_{st} I_x}{m(d - x)} = 34\,kN$

24 may 2021

16

A rectangular cantilever beam of size 230 m·m width × 500 m·m effective depth is subjected to a bending moment of 80 kNm Design the reinforcement for flexure. The materials are M20 grade Concrete & HYSD reinforcement.

Given data:-

width of beam (b) = 230 m·m

Effective depth (d) = 500 m·m.

Bending moment (M) = 80 kNm

M20 grade σcbc = 7 N/m

HYSt reinforcement σst = 230 m·m.

step-1

$M_1 = Q_{bal} \times bd^2$

$= 0.91 \times 230 \times 500^2$

$= 52.33$ kNm

$M > M_1$ so the beam is doubly reinforcement.

$Ast_1 = \frac{M_1}{\sigma st\ jd}$

$= \frac{52.33}{230 \times 0.91 \times 500} = 506 mm^2$

$M = M_1 + M_2$

$M_2 = M - M_1 = 80 - 52.33 = 27.67$ kNm

$m = \frac{280}{\sigma cbc} = 13.33$

$$A_{sc} = \frac{M_2}{(1.5m-1)\,\sigma_{cbc}\left(\frac{x-d'}{x}\right)(d-d')}$$

$$= \frac{27.67\times10^6}{(1.5\times13.33-1)\,7}$$

$$= 624.73\ mm^2 \simeq 625\,mm^2$$

$$A_{st_2} = \frac{M_2}{\sigma_{st}(d-d')} = \frac{27.67\times10^6}{230\,(500-40)}$$

$$= 261.53 \simeq 262\,mm^2$$

Assume $d' = 40\,m.m.$

$$A_{st} = A_{st_1} + A_{st_2} = 506 + 262 = 768\,mm^2$$

$$A_{sc} = 625\,mm^2$$

Assume provide 3 no of 20 m.m dia bar at top as compression zone.

$$A_{sc} = 3\times\frac{\pi}{4}\times20^2 = 942\ mm^2$$

provide 4 no of 16 mm at bottom of beam

$$A_{st} = 4\times\frac{\pi}{4}\times16^2 = 804\ mm^2.$$

Step-2

To Find neutral axis depth

$$b\cdot x\cdot\frac{x}{2} + (1.5m-1)\,A_{sc}\,(x-d') = m\,A_{st}\,(d-x)$$

$$= 230\,\frac{x^2}{2} + (1.5\times13.33\times1)\,942\,(x-40) = 13.33\times804\,(500-x)$$

$\Rightarrow 115x^2 + 17893.29(x-40) = 10717.32(500-x)$

$\Rightarrow 115x^2 + 17893.29x - 715731.6 = 5358660 + 10717.3x$

$\Rightarrow 115x^2 + 28610.61x - 6074391.6$

$\Rightarrow x_1 = 136.93$ mm.

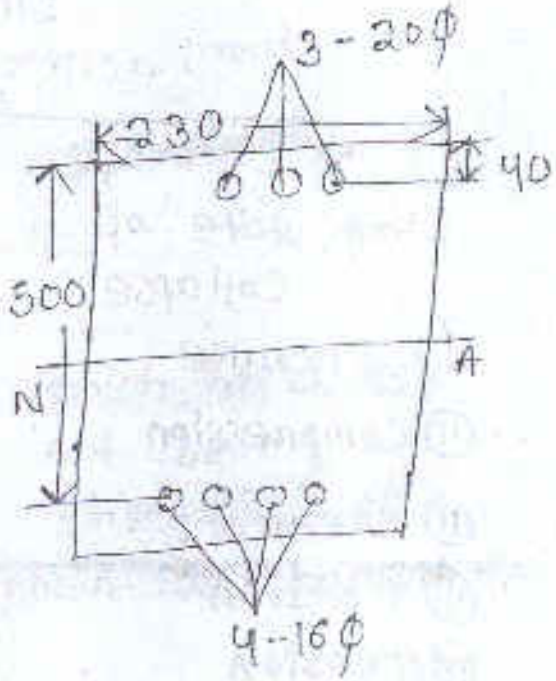

Limit state design

25 May 2021

The acceptable limit for the safety & serviceability requirements before failure occures is called as limit state method.

Limit state

- Limit state of collapse
  - (i) Flexure
  - (ii) Compression
  - (iii) Shear
  - (iii) Torsion
  - (iv) Tension
- Limit state of serviceability
  - (1) Durability
  - (2) Stability
  - (3) Fire resistance
  - (4) Deflection
  - (5) Cracking

~~Limit state design~~

The ~~accept~~

characteristic strength of materials

The characteristic strength of material's is that value of the strength of the material below which not more than 5% of the test results are expected to fail.

Grade of conc.	Characteristic strength (Fck)
M_{15} →	$15\ N/mm^2$
M_{20} →	$20\ N/mm^2$
M_{25} →	$25\ N/mm^2$

M30 ---> 30 N/mm²

M35 ---> 35 N/mm²

Grade of steel	characteristic strength (Fy)
Fe250	Fy = 250 N/mm²
Fe415	Fy = 415 N/mm²
Fe500	Fy = 500 N/mm²

Characteristic Load

The value of load which has a 95% of probability of not being exceeded during the life of the structure is known as characteristic load.

31 May 2021

Partial safety factors :-

Types of Load

Dead Load
Live Load
Wind Load
Earthquake Load
Impact Load
Snow Load

Load Combination	Limit state of collapse			Limit state of Serviceability		
	DL	LL	WL	DL	LL	WL
DL + LL	1.5	1.5		1.0	1.0	
DL + WL	1.5		1.5	1.0		1.0
DL + LL + WL	1.2	1.2	1.2	1.0	0.8	0.8

Partial safety factor (γ_m) for materials :-

Materials	partial safety factors
Concrete →	1.5
steel →	1.15

Limit state of colapse :- flexure :-

Assumptions

① plane section normal to the axis remain plane after to the bending.

⇒ This assumption means that strain at any point on the cross section is directly proportional to its distance from the neutral axis.

② The maximum strain in concrete at the outermost compression fibre is taken as 0.0035 in bending.

③ The stress - strain diagrame of concrete is parabolic from strain value of zero to main & corresponding stress value of zero

The stress now remains constant & strain increase to 0.0035. The relationship between the compressive stress distribution in concrete & the strain in concrete may be assumed to be rectangular, trapezoid, parabola or any other shape for design purposes the compressive strength of concrete in the structure shall be assumed to be 0.67 timed the characteristic strength.

④ The tensile strength of concrete is ignored.

⑤ The stresses in reinforcement are derived from representive stress-strain curve for the type of steel used.

⑥ The maximum strain in the tension reinforcement in the section at failure shall not be less than

$$\varepsilon_s = \frac{f_y}{1.15 E_s} + 0.002$$

f_y = characteristic strength of steel

E_s = Young's modulus of steel

$E = 2 \times 10^5 \ N/mm^2$

1 June 2021

Derivation formula for balanced singly reinforced rectangular beam :-

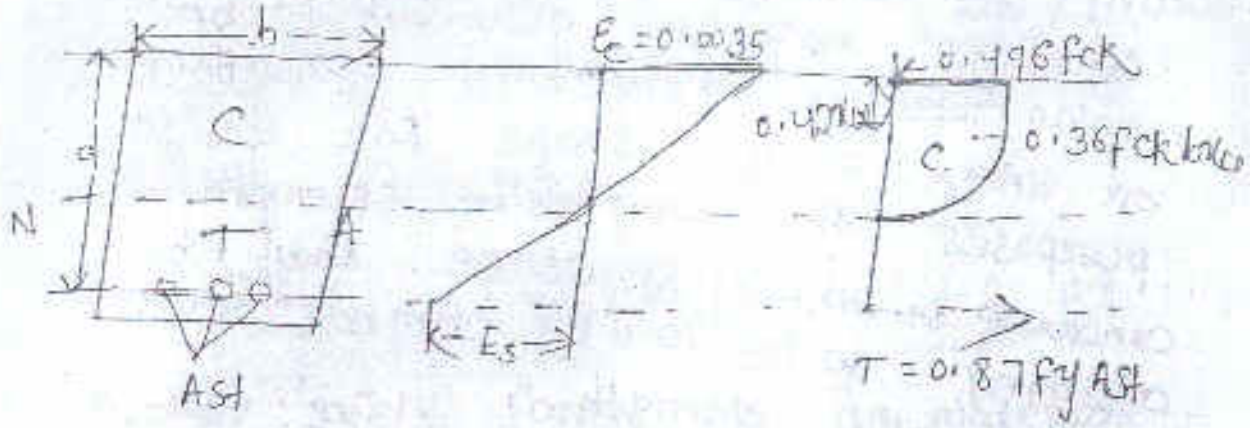

To find N.A

Total Compression = total tension

$0.36 f_{ck}\, b x_u = 0.87 f_y A_{st}$

$$\boxed{x_u = \frac{0.87 f_y A_{st}}{0.36 f_{ck}\, b}}$$

To find Lever Arm (z)

$$\boxed{z = d - 0.42 x_u}$$

To find out Moment of Resistance

MR = total Compression × LA

(OR)

total tension × LA

$$MR = 0.36 f_{ck}\, b x_u \times (d - 0.42 x_u)$$

$$= \frac{0.36 f_{ck}\, b x_u}{d}\left(\frac{d}{d} - \frac{0.42 x_u}{d}\right)$$

$\Rightarrow 0.36 f_{ck} \frac{x_u}{d} \left(1 - 0.42 \frac{x_u}{d}\right) b$

(x)

$$M_R = 0.87 f_y A_{st} (d - 0.42 x_u)$$

$$= 0.87 f_y A_{st} \left(d - 0.42 \left(\frac{0.87 f_y A_{st}}{0.36 f_{ck} b}\right)\right)$$

$$= 0.87 f_y A_{st} d \left(1 - \frac{f_y A_{st}}{f_{ck} b d}\right)$$

Maximum depth of N.A

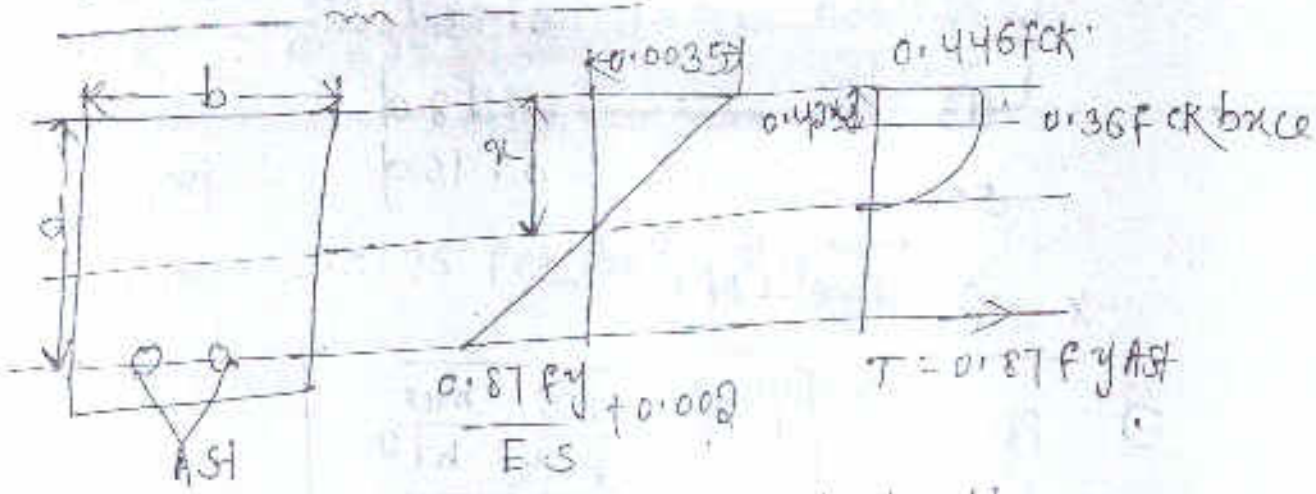

By the geometry of the strain dia

$$\frac{x_{u\,max}}{d} = \frac{0.0035}{\frac{0.87 f_y}{E_s} + 0.002 + 0.0035}$$

$$\frac{x_{u\,max}}{d} = \frac{0.0035}{\frac{0.87 f_y}{2 \times 10^5} + 0.002 + 0.0035}$$

$$\frac{x_{umax}}{d} = \frac{700}{1100 + 0.87 f_y}$$

2 June 2021

f_y (N/mm²)	$\frac{x_{umax}}{d}$
250	0.53
415	0.48
500	0.46

$$\frac{x_{umax}}{d} = 0.53$$

$$x_{umax} = 0.53d$$

f_y (N/mm²)	x_{umax}
250	0.53d
415	0.48d
500	0.46d

% of steel (Pt)

(i) $$P_t = 50\left[1 - \sqrt{1 - \frac{4.6}{f_{ck}}\frac{M_u}{bd^2}}\right] / f_y/f_{ck}$$

(ii) $$P_{t\,limit} = 50\left[1 - \frac{1 - 4.6}{f_{ck}}\frac{M_{u\,limit}}{bd^2}\right] / f_y/f_{ck}$$

If $x_u < x_{umax}$, the section is under reinforced section

$$M_R = 0.87 f_y A_{st} d\left[1 - \frac{A_{st} f_y}{b d f_{ck}}\right]$$

If $x_u > x_{umax}$, the beam is over reinforced section.

$$MR_{limit} = 0.36 f_{ck}\, b x_u \left(d - 0.42 \frac{x_{umax}}{d}\right)^2$$

$$\boxed{MR = 0.36 f_{ck}\, b x_u (d - 0.42 x_u)}$$

Grade of steel	$\frac{x_{umax}}{d}$	M_{ulimit}
Fe 250	0.53	$0.148 f_{ck} bd^2$
Fe 415	0.48	$0.138 f_{ck} bd^2$
Fe 500	0.46	$0.133 f_{ck} bd^2$

For balanced section

$$M.R = 0.87 f_y A_{st} d \left[1 - \frac{A_{st} f_y}{b d f_{ck}}\right]$$

(or)

$$M_{ulimit} = 0.36 f_{ck} bd^2 \cdot \frac{x_{umax}}{d} \times \left(1 - 0.42 \frac{x_{umax}}{d}\right)$$

1Q A rectangular reinforced conc. beam has a width of 200mm & effective depth 466 mm is reinforced with 2 bars of 20mm dia bar. The materials are M20 grade concrete & Fe415 grade of steel. Calculate the ultimate moment of resistance of the section.

Soln:

Given data

Width of beam(b) = 200mm

Effective depth = 460mm

$A_{st} = 2 \times \frac{\pi}{4} \times 20^2 = 628.318 mm^2$

For M20 grade conc. $f_{ck} = 20 N/mm^2$

Fe415 steel $f_y = 415 N/mm^2$

Step-1

Depth of NA (x_u)

$$x_u = \frac{0.87 f_y A_{st}}{0.36 f_{ck} b}$$

$$= \frac{0.87 \times 415 \times 628}{0.36 \times 20 \times 200}$$

$$= 157.45 mm$$

Max^m depth of N.A ($x_{u\,max}$)

$$x_{u\,max} = 0.48 d$$

$$= 0.48 \times 460 = 220.8 mm$$

$x_u < x_{u\,max}$ so under reinforced section.

Step-2

Ultimate moment of Resistance

$$M_u = 0.87 f_y A_{st} d \left[1 - \frac{A_{st} f_y}{b d f_{ck}}\right]$$

$= 0.87 \times 415 \times 628 \times 460 \left[1 - \frac{628 \times 415}{200 \times 460 \times 20}\right]$

$= 89526918.39$ N mm

$= 89.52$ kN.m

22 A singly reinforced rectangular beam of width 230mm & 460mm effective depth is reinforced with 5 no s of 25mm dia bar. The materials are M20 grade fe415. Calculate ultimate moment of Resistance of section.

3 June 2021

Sol given data :-

width of beam (b) = 230mm

Effective depth (d) = 460mm

$A_{st} = 5 \times \frac{\pi}{4} \times 25^2 = 1570.79$ mm

for M20 grade fck = 20 N/mm²

Fe415 fy = 415 N/mm²

Step-1

Depth of N.A x_u

$x_u = \frac{0.87 \times 415 \times 1570}{0.36 \times 20 \times 230} = 342.29$ mm

max^m depth of N.A (x_{umax})

$x_{umax} = 0.48d = 0.48 \times 460 = 220.8$ mm

Step- $x_u > x_{umax}$ so the beam is over reinforced section.

MR = $0.138 f_{ck} b d^2$

$= 0.138 \times 20 \times 230 \times 460^2$

$= 134323680$ Nmm

$= 134.32$ kNm

22 A reinforced concrete beam 300mm width is reinforced with $1436 mm^2$ of fe415 HYSD bars at an effective depth of 500 mm If M20 grade concrete is used estimate the moment of resistance of the section by LSM

Sol width of beam(b) = 300mm

Effective depth = ~~[illegible]~~ $500 mm^2$

$A_{st} = 1436 mm^2$

M20 grade (fck) = $20 N/mm^2$

Fe415 = $415 N/mm^2$

Step-1

$x_u = \frac{0.87 \times 415 \times 1436}{0.36 \times 20 \times 300}$

$= 240.03$ mm.

max^m depth of N.A x_{umax}

$0.48 \times 500 = 240$ mm.

$x_u = x_{umax}$ so the beam is balanced section.

$MR = 0.138 f_{ck} b d^2 = 0.138 \times 20 \times 300 \times 500^2$

$= 207000000 \text{ Nm}$

$= 207 \text{ KNm}$

To find out steel area for a given factored Moment :-

Step-1

For a given factored moment (1.5X working moment) & assumed width of the section.

Step-2

Find out depth (if depth not given)

$$d = \sqrt{\frac{M_{u\,limit}}{f_{ck} \times b \times \text{constant}}}$$

$M_{u\,limit} = 0.148 f_{ck} b d^2$

$= 0.138 f_{ck} b d^2$

$= 0.133 f_{ck} b d^2$

If depth given :—

calculate $M_{u\,limit}$ value according to this value. compare with 'Mu' choose the section.

If $M_{u\,limit} > M_u$ it is under reinforced section.

$$M_u = 0.87\, A_{st}\, f_y\, d \left[1 - \frac{f_y A_{st}}{f_{ck} b d}\right]$$

(iii) If $M_{u\,lim} = M_u$, then it is balance section.

$$\frac{x_{u\,max}}{d} = \frac{0.87 f_y A_{st}}{0.36 f_{ck} b d}$$

36 Determine the area of reinforcement required for a singly reinforced conc. section having a width of 300mm & an effective depth of 600 mm to resist a factored moment of 200 kNm The materials are M20 grade conc. & HYSD reinforcement of grade Fe415.

data given

width of (b) = 300 mm

Effective depth (d) = 600 mm.

factored moment (M_u) = 200 kNm
= 200×10^6 Nm

M20 grade (f_{ck}) = 20 N/mm²

HYSD Fe415 (f_y) = 415 N/mm²

Step-1

$$M_{u\,limit} = 0.138\, f_{ck}\, b d^2$$

$$= 0.138 \times 20 \times 300 \times 600^2$$

$$= 298\,080000 \text{ Nm}$$

$$= 298 \text{ kNm}$$

$M_{u\,limit} = 298$ kNm

$M_u = 200$ kNm

$M_{u\,limit} > M_u$ so it is under reinforced section.

Step-2

find steel area

$$M_u = 0.87 A_{st} f_y d \left[1 - \frac{f_y A_{st}}{f_{ck} b d} \right]$$

$$200 \times 10^6 = 0.87 \times A_{st} \times 415 \times 600 \left[1 - \frac{415 A_{st}}{20 \times 300 \times 600} \right]$$

$$\Rightarrow 200 \times 10^6 = 216630 A_{st} \left(1 - 1.15 \times 10^{-4} A_{st} \right)$$

$$\Rightarrow 200 \times 10^6 = 216630 A_{st} - 24.91 A_{st}$$

4 June 2021

26 Determine the area of reinforcement required for a singly reinforced concrete section having a width of 230 mm resist a factored moment of 300 KNm The materials are M20 grade conc. & HYSD reinforcement of grade Fe 415.

Soln Given data:-

width of beam (b) = 230 mm

Factored Moment = 300 KNm

fck = 20 N/mm2

fy = 415 N/mm2

Step-1

Find effective depth of beam (d).

$$d = \sqrt{\frac{mu\,limit}{fck \times b \times constant}}$$

$$mu\,limit = 0.138\, fck\, bd^2$$

$$d = \sqrt{\frac{300 \times 10^6}{20 \times 230 \times 0.138}} = 687.45 \simeq 688\,mm$$

Step-2

$$Mu\,limit = 0.138\, fck\, bd^2$$

$$= 0.138 \times 20 \times 230 \times 688^2$$

$$= 300\ KNm$$

$M_u = 300$ kNm

$M_{ulimit} = 300$ kNm

$M_u = M_{ulimit}$ it is balanced section.

Step-3

Area of steel

$$\frac{x_{umax}}{d} = \frac{0.87 f_y A_{st}}{0.36 f_{ck} bd}$$

$$0.48 = \frac{0.87 \times 415 A_{st}}{0.36 \times 20 \times 230 \times 688}$$

$$546877.44 = 0.87 \times 415 A_{st}$$

$$A_{st} = \frac{546877.44}{0.87 \times 415} = 1514 mm^2$$

3Q A singly reinforced beam is subjected to a bending moment of 36kNm at working loads. The width of beam is 200mm find the depth & steel area of the section. The materials are M20 grade conc. & HYSD reinforcement.

Given data:-

bending moment = 36kNm at working loads

factored moment = (1.5x working loads)

(1.5x36) = 54 kNm

width of beam (b) = 200mm

M20 grade fck = 20 N/mm²

HYSD Fe415 fy = 415 N/mm²

Step-1

$$d = \sqrt{\frac{M_u}{f_{ck} \times b \times \text{Constant}}}$$

$$= \sqrt{\frac{54 \times 10^6}{20 \times 200 \times 0.138}}$$

$$= 312.77 \cong 313mm$$

$$M_{ulimit} = 0.138 \times 20 \times 200 \times 313^2$$

$$= \cancel{53733888} \text{ Nmm}$$

$$= 54078888 \text{ Nmm} = 54 \text{ KNm}$$

$M_u = 54$ KNm

$M_{ulimit} = 54$ KNm

then the beam is balanced section.

Step-2

Area of steel

$$\frac{M_{umax}}{d} = \frac{0.87 f_y A_{st}}{0.36 f_{ck} b d}$$

$$0.48 = \frac{0.87 \times 415 A_{st}}{0.36 \times 20 \times 200 \times 313}$$

$$\frac{216345.6}{0.87 \times 415} = A_{st}$$

$$A_{st} = 599.21 \text{ mm}^2$$

$\cancel{216345.6} = 0.87 \times 415 A_{st}$

$A_{st} = \cancel{2.3345.6}$

$\cancel{0.87 \times 415}$

$0.448 = \dfrac{0.87 \times 415 \times A_{st}}{0.36 \times 20 \times 230 \times 688}$

$\dfrac{514.6877.44}{0.87 \times 415} = A_{st}$

$\Rightarrow \cancel{1514\ mm^2} = A_{st}$

Q A singly reinforced concrete beam subjected to a bending moment 56 kNm at working loads. The width of beam is 230 mm. balanced design. Find depth & steel area. The materials are M20 grade conc. & HYSD reinforcement.

Given data :-

Moment = 56 kNm

$M_u = 1.5 \times 56 = 84$ kNm

width of beam (b) = 230 mm

M20 grade $f_{ck} = 20\ N/mm^2$

f_y F415 N/mm^2

Step - 1

$d = \sqrt{\dfrac{84 \times 10^6}{20 \times 230 \times 0.138}}$

$= 363.76$ mm

Step-2

Area of steel

$$\frac{x_{umax}}{d} = \frac{0.87 f_y A_{st}}{0.36 f_{ck} bd}$$

$$0.48 = \frac{0.87 \times 415 A_{st}}{0.36 \times 20 \times 230 \times 354}$$

$$A_{st} = 216345.6 = 0.87 \times 415$$

$$\Rightarrow \frac{289336.32}{0.87 \times 415} = A_{st}$$

$$\Rightarrow A_{st} = 801.37 mm^2$$

Q A rectangular beam 230 mm wide and 250 mm effective depth is reinforced with 4 no 16 mm diameter bars. find out the depth of neutral axis and specify the type of beam. The materials are M20 grade conc. and HYSD reinforcement of grade Fe415. Also find out the depth of neutral axis if the reinforcement is increased to 4 no 20 mm diameter bars.

Sol Given data :-

width of beam (b) = 230 mm

Effective depth (d) = 520 mm

no of bar = 4

dia = 16 m.m $A_{st} = 804 mm^2$

Case-1

$A_{st} = 3 \times \frac{\pi}{4} \times 20^2 = 942.47 \, mm^2$

Step 1

$$x_u = \frac{0.87 \times f_y \times A_{st}}{0.36 \times 20 \times 230} = \frac{0.87 \times 415 \times 942.47}{0.36 \times 20 \times 230}$$

$= 205.48$

Step-2

$x_{umax} = 0.48 \times 460 = 220.8$

$x_u < x_{umax}$ so the beam is under reinforced section.

Step-3

$$M_u = 0.87 f_y A_{st} d \left[1 - \frac{A_{st} f_y}{b d f_{ck}} \right]$$

$$= 0.87 \times 415 \times 942.47 \times 460 \left[1 - \frac{942.47 \times 415}{230 \times 460 \times 20} \right]$$

$= 126672921.5 \, N \cdot mm$

$= 126.67 \, kNm$

Case-2 $A_{st} = 5 \times \frac{\pi}{4} \times 20^2 = 1570.79 \, mm^2$

Step-1

$$x_u = \frac{0.87 f_y A_{st}}{0.36 \times 20 \times 230} = 342.47$$

Step-2 $x_{umax} = 0.48 \times 460 = 220.8$

Step-1

depth of N.A (x_u)

$$x_u = \frac{0.87 f_y A_{st}}{0.36 f_{ck} b} = \frac{0.87 \times 415 \times 804}{0.36 \times 20 \times 230}$$

$= 175.29$ mm

Step-2 Max^m depth of N.A ($x_{u max}$)

$0.48d = 0.48 \times 520 = 249.6$ mm

$x_u < x_{u max}$ so the beam is in under reinforced section.

Case 2

$A_{st} = 4 \times \frac{\pi}{4} \times 20^2 = 1256.63$ mm

~~Step~~ N.A (x_u) depth of

$$x_u = \frac{0.87 \times 415 \times 1256.63}{0.36 \times 20 \times 230} = 273.97 \text{ mm}$$

6) A 3m by reinforced rectangular beam of width 230 mm and 460 mm effective depth is reinforced with 3 no 20 mm diameter bars. find out the factored moment of resistance of the section. The materials are M20 grade conc. and HYSD reinforcement of grade fe 415. AS10 find out the factored moment of resistance if it is reinforced with 5 no 20 mm dia.

Sol Given data:-

width of beam (b) = 230 mm

effective depth (d) = 460 mm

$f_{ck} = 20$ N/mm^2

$f_y = 415$ N/mm^2

as max < xu so the beam is over reinforced section.

Step-3

$M_{u\,lim\,it} = 0.138 \times f_{ck}\, b d^2$

$= 0.138 \times 20 \times 230 \times 560^2$

$= 134323680$ Nmm

$= 134.32$ kNm

IQ A rectangular cantilever beam of size 230 mm width × 500 mm effective depth is subjected to a bending moment of 80 kN·m at working loads. Find the steel area required. The materials are M20 grade concrete and reinforcement of grade Fe415.

Soln

Given data :-

width of beam (b) = 230 mm

Effective depth (d) = 500 mm

bending moment = 80 kNm

factor moment = 1.5×80 = 120 kNm

fck = 20 N/mm²

$f_y = 415 \ N/mm^2$

Step-1

$M_{u\,limit} = 0.138 \, f_{ck} b d^2$

$= 0.138 \times 20 \times 230 \times 500^2$

$= 158.70 \ kNm$

$M_u < M_{u\,limit}$ so the beam under reinforced section.

$$M_u = 0.87 \, A_{st} f_y d \left[1 - \frac{f_y A_{st}}{f_{ck} b d} \right]$$

$$= 120 \times 10^6 = 0.87 \times A_{st} \times 415 \times 500 \left[1 - \frac{415 \times A_{st}}{20 \times 230 \times 500} \right]$$

$\Rightarrow 120 \times 10^6 = 180525 \, A_{st} \left(1 - 1.80 \times 10^{-4} A_{st} \right)$

$\Rightarrow 120 \times 10^6 = 180525 A_{st} - 32.49 \, A_{st}^2$

$\Rightarrow 32.49 A_{st}^2 - 180525 A_{st} + 120 \times 10^6 = 0$

$\Rightarrow A_{st} = 4784.33 \ mm^2$

7 June 2021

Doubly reinforced Beam

For design moment 'Mu' if the size of the rectangular beam section is fixed and limiting moment of resistance of singly reinforced section is less than 'M'. There are two method to design such beam :-

① Increase the conc. mix to increase the capacity of section ?

② Reinforcement are provided in compression zone to resist additional moment.

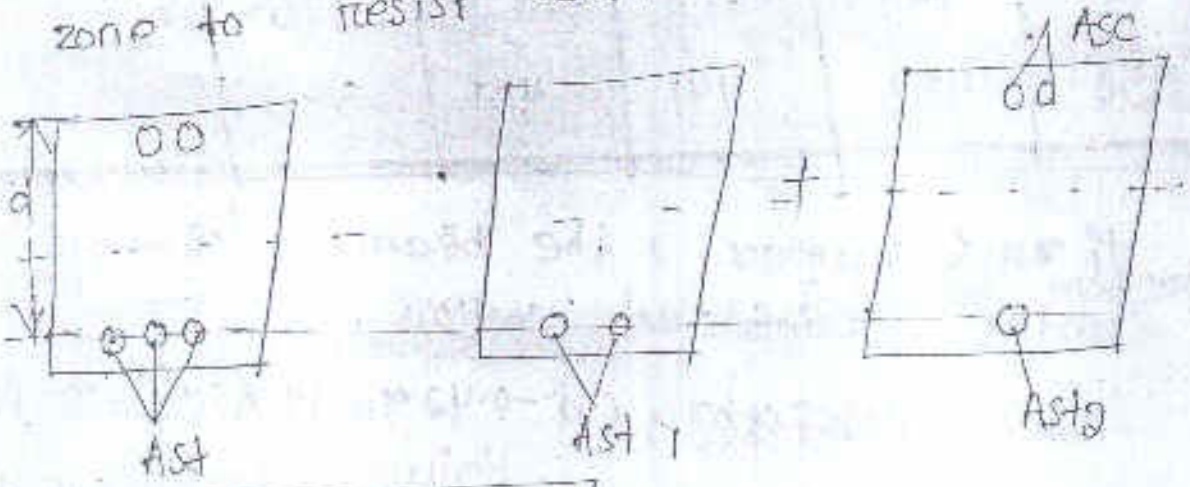

$$M_u = M_{u\,limit} + M_2$$

$$A_{st} = A_{st1} + A_{st2}$$

$$A_{st2} = \frac{A_{sc} \times f_{sc}}{0.87 f_y}$$

$$A_{st\,limit} = \frac{M_{u\,limit}}{0.87 f_y (d - 0.42\, x_{u\,max})}$$

$$A_{sc} = \frac{M_{u2}}{f_{sc}(d - d')}$$

To find out depth of N.A

$0.36 f_{ck} b x_u + f_{sc} A_{sc} = 0.87 f_y A_{st}$

stress in compression zone

f_y N/mm²	d'/d			
	0.05	0.1	0.15	0.2
250	217	217	217	217
415	355	353	342	329
500	424	412	395	370
550	458	441	419	380

If $x_u < x_{umax}$, the beam is in under reinforced section.

$M_u = 0.36 f_{ck} b x_u (d - 0.42 x_u) + A_{sc} (f_{sc} - f_{cc}) (d - d')$

$M_u = 0.36 f_{ck} b x_u (d - 0.42 x_u) + A_{sc} f_{sc} (d - d')$

If $x_u > x_{umax}$, over reinforced beam.

$M_u = M_{ulimit} + f_{sc} A_{sc} (d - d')$

(over & balanced)

Types of problems

Type-1

To find out the moment of Resistance of the given section.

$C = T$

$0.36 f_{ck} b x_u + A_{sc}(f_{sc} - f_{cc}) = 0.87 f_y A_{st}$

$x_{umax} = ?$

If $x_u < x_{umax}$ the beam is underreinforced section

If $x_u > x_{umax}$ the beam is over reinforced section

Type-2

find out reinforcement & factored moment :—

① find out $M_{ulimit} = 0.148 f_{ck} b d^2$

for 415 = $0.138 f_{ck} b d^2$

for 500 = $0.133 f_{ck} b d^2$

$$A_{st\,limit} = \frac{M_{ulimit}}{0.87 f_y (d - 0.42 x_{umax})}$$

② $M_{u2} = M_u - M_{ulimit}$

③ find compression zone steel area

$$A_{sc} = \frac{M_{u2}}{f_{sc}(d - d')}$$

Step-4

Area of steel in tensile

$$A_{st2} = \frac{A_{sc} f_{sc}}{0.87 f_y}$$

$$\boxed{A_{st} = A_{st\,lim} + A_{st2}}$$

8 June 2021

10 A doubly reinforced beam section is 250 mm wide & 450 mm deep to the centre of the tensile reinforcement. It is reinforced with 2 bars of 16mm dia. as compression reinforcement at an effective cover of 50 mm & 4 bar of 25 mm dia bar as tensile steel. calculate the ultimate moment of resistance. use M20 grade conc. & Fy 415 reinforcement

Given data:-

width of beam (b) = 250mm

Effective depth (d) = 450mm

$A_{sc} = 2 \times \frac{\pi}{4} \times 16^2 = 402\ mm^2$

$A_{st} = 4 \times \frac{\pi}{4} \times 25^2 = 1963.49 \simeq 1964\ mm^2$

$f_{ck} = 20\ N/mm^2$

$f_y = 415\ N/mm^2$

$\frac{d'}{d} = \frac{50}{450} = 0.1$

$f_{sc} = 353\ N/mm^2$

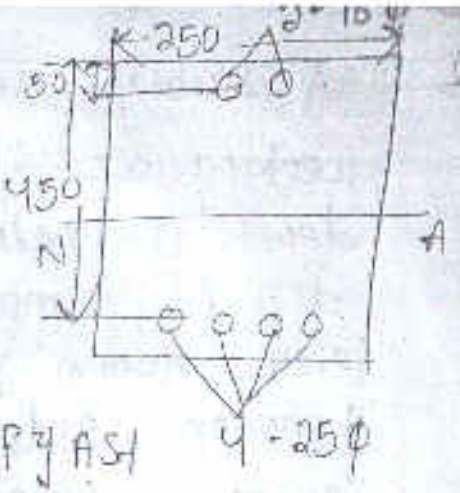

Step 1

To find depth of N.A

$C = T$

$0.36 f_{ck} b x_u + f_{sc} A_{sc} = 0.87 f_y A_{st}$

$\Rightarrow 0.36 \times 20 \times 250\, x_u + 353 \times 402 = 0.87 \times 415 \times 1964$

$\Rightarrow 1800 x_u + 141906 = 709102.2$

$\Rightarrow 1800 x_u = 709102.2 - 141906$

$\Rightarrow x_u = \dfrac{709102.2 - 141906}{1800} = 315\ mm$

$x_{umax} = 0.48 d$

$= 0.48 \times 450 = 216\ mm$

$x_u > x_{umax}$ the beam is in over reinforced section.

Step-2

To find ultimate moment of Resistance (M_u)

$M_u = M_{ulimit} + f_{sc} A_{sc} (d - d')$

$M_{ulimit} = 0.138 \times 20 \times 250 \times 450^2$

$= 139.72\ kNm$

$M_u = 139.72 \times 10^6 + 353 \times 402 \times (450 - 50)$

$= 196.48\ kNm$

2Q A doubly reinforced conc. beam having rectangular section 250 x 540 mm overall depth is reinforced with 2 bars of 12mm dia in compression side of effective cover 40mm & 4 bars 20mm dia in tension side. use M20 conc. & Fe415 steel. Calculate flexural strength of the section. Take effective depth cover 40 mm both side.

Given data:-

width of beam = 250mm

overall depth (D) = 540mm

Effective cover (d') = 40mm

$d = 540 - 40 = 500mm$

$\frac{d'}{d} = \frac{40}{500} = 0.08$ $f_{sc} = 353 N/mm^2$

$A_{st} = 1256 mm^2$

M20 grade $f_{ck} = 20 N/mm^2$

$A_{sc} = 226 mm^2$

Fe415 $(f_y) = 415 N/mm^2$

Step-1

$M_{u lim it} = 0.138 f_{ck} bd^2$

$= 0.138 \times 20 \times 250 \times 500^2$

$= 172.5 kNm$

$x_{u max} = 0.48 d = 0.48 \times 500$

$= 240 mm$

$$A_{st\,Limit} = \frac{M_{u\,limit}}{0.87 f_y (d - 0.42\, x_{u\,max})}$$

$$= \frac{117.257 \times 10^6}{0.87 \times 415 (500 - 0.42 \times 214)}$$

$$= 1196.8 \approx 1197\ mm^2$$

$$A_{st} = 1256\ mm^2$$

$$A_{st2} = \frac{f_{sc} \times A_{sc}}{0.87 f_y} = \frac{353 \times 226}{0.87 \times 415}$$

$$= 220.96 \approx 221\ mm^2$$

$$A_{st} = A_{st1} + A_{st2}$$

$$A_{st1} = A_{st} - A_{st2}$$

$$= 1256 - 221 = 1035\ mm^2$$

Step 2

To find x_u

$$0.36 f_{ck} b x_u + f_{sc} A_{sc} = 0.87 f_y A_{st}$$

$$x_u = \frac{0.87 f_y A_{st}}{0.36 f_{ck} b + f_{sc} A_{sc}}$$

$$= 0.36 \times 20 \times 250 x_u + 353 \times 226 = 0.87 \times 415 \times 1256$$

$$= 1800 x_u + 79778 = 453478.8$$

$$1800 x_u = 453478.8 - 79778$$

$$x_u = \frac{453478.8 - 79778}{1800} = 207\ mm$$

$x_{umax} = 240$ $x = 207$

$x_u < x_{umax}$ so it is under reinforced section.

$M_u = 0.36 f_{ck} b x_u (d - 0.42 x_u) + A_{sc} f_{sc} (d - d')$

$= 0.36 \times 20 \times 250 \times 207.81 (500 - 0.42 \times 207.81)$
$+ 226 \times 353 (500 - 40)$

$= 191079022.9$ Nm

$= 191$ kNm

<u>3Q</u> <u>9 June 2021</u>

A rectangular beam of size 230mm wide x 500mm effective depth is subjected to a factored moment of 200 kNm. Find the reinforcement for flexure. The materials are M20 grade conc. & Fe415 steel. Take cover = 50mm.

<u>Soln</u> Given data :-

Width of beam (b) = 230mm

Effective depth (d) = 500mm

$f_{ck} = 20$ N/mm^2

$f_y = 415$ N/mm^2

factored moment (M_u) = 200 kNm

$M_{ulimit} = 0.138 f_{ck} b d^2$

$= 158.7$ KNm

$M_{ulimit} < M_u$ so the beam is design as doubly reinforcement.

Step-1

$M_{ulimit} = 158.7$ KNm

$M_u = 200$ KNm

$M_{u2} = M_u - M_{ulimit}$

$= 200 - 158.7 = 41.3$ KNm

Assume $d' = 50$ mm

$\frac{d'}{d} = \frac{50}{500} = 0.1$ $f_{sc} = 353$ N/mm^2

$A_{sc} = \frac{M_{u2}}{f_{sc}(d-d')} = \frac{41.3 \times 10^6}{353(500-50)}$

$= 260$ mm^2

$A_{st2} = \frac{A_{sc} f_{sc}}{0.87 f_y} = \frac{260 \times 353}{0.87 \times 415} = 254$ mm^2

$x_{u\,max} = 0.48 \times 500 = 240$ mm

$A_{st\,limit} = \frac{M_{ulimit}}{0.87 f_y (d - 0.42\, x_{u\,max})}$

$= \frac{158.7 \times 10^6}{0.87 \times 415 \times (500 - 0.42 \times 240)} = 1101.08$ mm^2

$A_{st} = A_{st1lim} + A_{st2} = 1355.68\ mm^2$

$A_{sc} = 260\ mm^2$

provide 2 bars 16 mm dia $A_{sc} = 2 \times \frac{\pi}{4} \times 16^2$

$= 402\ mm^2$

$A_{st} = 1355$ provide 5 no 20 mm dia bar

$A_{st} = 5 \times \frac{\pi}{4} \times 20^2 = 1570\ mm^2$

$x_u = 0.36 f_{ck} b x_u + f_{sc} A_{sc} = 0.87 \times f_y A_{st}$

$\Rightarrow 0.36 \times 20 \times 230 x_u + 353 \times 402 = 0.87 \times 415 \times 1570$

$\Rightarrow 1656 x_u + 141906 = 566848.5$

$\Rightarrow 1656 x_u = 566848.5 - 141906$

$\Rightarrow x_u = \frac{566848.5 - 141906}{1656}$

$= 256\ mm^2$

$x_u > x_{umax}$ the beam is over reinforced section.

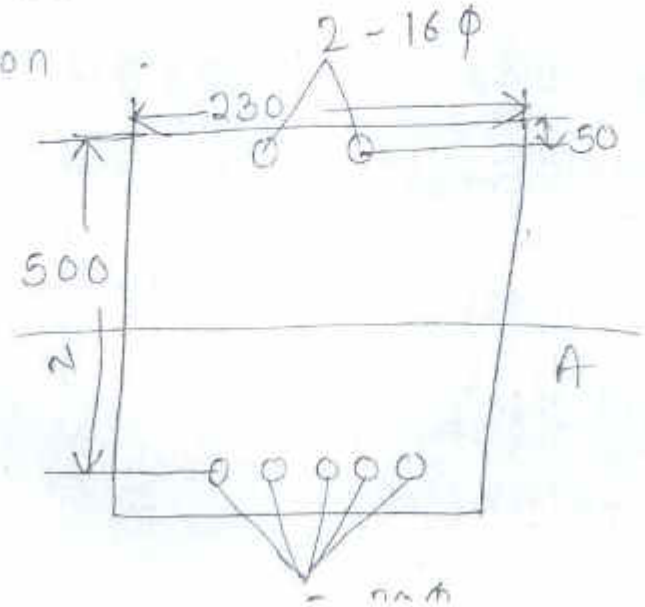

10 June 2021

Q Find the factored moment of resistance of a beam section 300mm wide x 450mm effective depth reinforced with 2-20mm diameters bars as compression reinforcement at an effective cover of 50mm and 4-25 mm diameter bars as tension reinforcement. The materials are M20 grade concrete and HYSD reinforcement of grade Fe415.

Given data:-

Width of beam = 300mm

Effective depth = 450mm

$A_{sc} = 2 \times \frac{\pi}{4} \times 20^2$

$= 628 \ mm^2$

$A_{st} = 4 \times \frac{\pi}{4} \times 25^2 = 1963 mm^2$

$d' = 50mm$

$f_{ck} = 20 \ N/mm^2$

$f_y = 415 \ N/mm^2$

$f_{sc} = \frac{d'}{d} = \frac{50}{450} = 0.1 = 353 \ N/mm^2$

Step-1 $M_{ulimit} = 0.138 f_{ck} b d^2$

$= 0.138 \times 20 \times 300 \times 450^2 = 167.67 \ kN.m$

$A_{st2} = \frac{A_{sc} f_{sc}}{0.87 f_y} = \frac{628 \times 353}{0.87 \times 415} = 613.9 \simeq 614 mm^2$

$A_{st1 limit} = A_{st} - A_{st2}$

$= 1963 - 614$

$= 1349$

$A_{st} = 614 + 1349 = 1963 mm^2$

Step 2

x_u

$0.36 f_{ck} b x_u + f_{sc} A_{sc} = 0.87 f_y A_{st}$

$\Rightarrow 0.36 \times 20 \times 300 x_u + 353 \times 628 = 0.87 \times 415 \times 1963$

$\Rightarrow 2160 x_u + 221684 = 708741.15$

$\Rightarrow 2160 x_u = 708741.15 - 221684$

$\Rightarrow x_u = \frac{487057.15}{2160}$

$= 225.48$

$x_{umax} = 0.48 \times d = 0.48 \times 450 = 216 mm$

$x_u > x_{umax}$ so the beam is over reinforced section.

$M_u = M_{ulimit} + f_{sc} A_{sc} (d - d')$

$= 167.67 \times 10^6 + 353 \times 628 (450 - 50)$

$= 256343600 \ N \cdot mm$

$= 256.34 \ kN \cdot m$

10 Jan. 2011

Q. Design a rectangular beam for an effective span of 6mt. The super-imposed load is 80 kN/m and size of the beam is limited to 30cm x 70cm overall. use M20 mix and Fe415 grade of steel.

Given data:-

Length of span = 6mt

super-imposed load = 80 kN/m

FCK = 20 N/mm2

fy = 415 N/mm2

width of beam 30cm = 300mm

overall depth = 70cm = 700mm

Dead load of beam = bd×25

= 0.3×0.7×25 = 5.2 kN/m

total load of beam = self wt of beam + super-imposed load

= 5.25 + 80

= 85.25 kN/m

factor load = (1.5× 85.25) = 128

factored moment = $\frac{wl^2}{8}$ = $\frac{128\times16^2}{8}$

= 576 kN.m

Let Effective cover = 40mm

Effective depth = 700 - 40 = 660mm

$f_{sc} = \frac{d'}{d} = \frac{40}{660} = 0.06$ = 353 N/mm2

Step-1

Limiting moment

$0.138\, f_{ck} b d^2 = 0.138 \times 20 \times 300 \times 600^2$

$= 360\,676\,800\ N \cdot mm$

$= 360.67\ kNm$

$M_u = 567 > M_{ulimit} = 360$ so the design doubly reinforced.

$M_{u2} = M_u - M_{ulimit}$

$= 576 - 360 = 216\ kNm$

$A_{sc} = \dfrac{M_{u2}}{f_{sc}(d-d')} = \dfrac{216 \times 10^6}{353 \times (660-40)}$

$= 986.93\ mm^2$

$A_{st2} = \dfrac{A_{sc} \times f_{sc}}{0.87 \times f_y} = \dfrac{986.93 \times 353}{0.87 \times 415}$

$= 964.42 = 965\ mm^2$

$x_{umax} = 0.48 \times 660 = 316.8\ mm = 317\ mm$

$A_{stlimit} = \dfrac{M_{ulimit}}{0.87 f_y (d - 0.42\, x_{umax})}$

$= \dfrac{360.67 \times 10^6}{0.87 \times 415 (660 - 0.42 \times 317)}$

$= 1896\ mm^2$

$A_{st} = A_{st\,limit} + A_{st2}$

$= 1986 + 965 = 2861\ mm^2$

$A_{sc} = 986.93$ provide 4 bars 20 ϕ

$A_{sc} = 4 \times \frac{\pi}{4} \times 20^2 = 1256\ mm^2$

$A_{st} = 2861$ provide 6 bars 25 ϕ

$A_{st} = 6 \times \frac{\pi}{4} \times 25^2 = 2945.24\ mm^2$

Step-2

To find x_u

$0.36 f_{ck}\, b x_u + f_{sc} A_{sc} = 0.87 f_y A_{st}$

$\Rightarrow 0.36 \times 20 \times 300 x_u + 353 \times 1256.63 = 0.87 \times 415 \times 2945.24$

$\Rightarrow 2160 x_u + 443495.08 = 1063378.9$

$\Rightarrow 2160 x_u = 1063378.9 - 443495.08$

$\Rightarrow x_u = \frac{619883.82}{2160} = 286.9\ mm$

$x_{u\,max} > x_u$ the beam is under reinforced section.

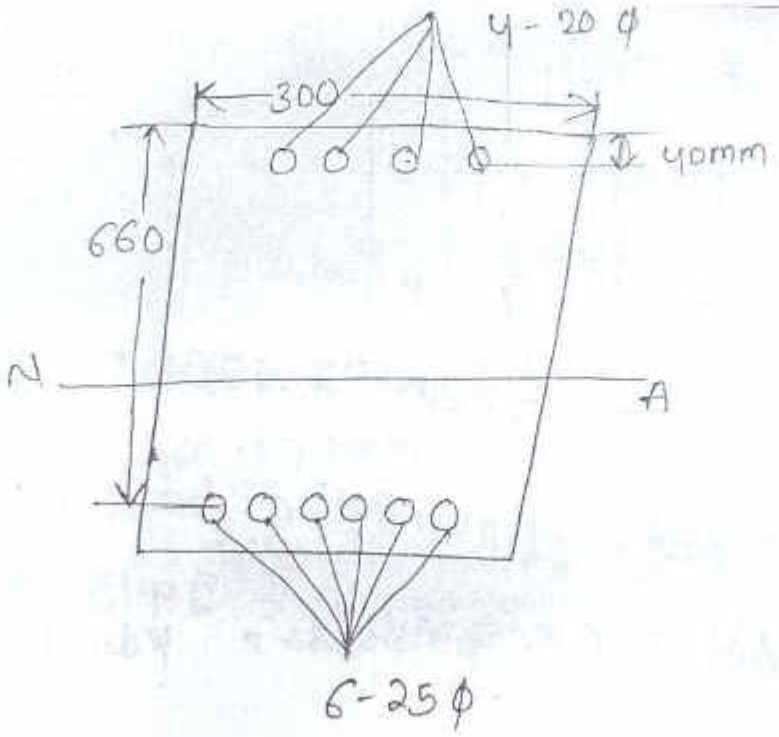

11 June 2021

A doubly reinforced rectangular beam 300mm wide & 450mm effective depth having 3 no 12 mm dia bar at compression side at an effective cover of 40mm & 5 no of 20mm dia are tension side. Calculate factored moment & also specify type of beam. The materials are M_{20} grade concrete & mild steel reinforcement.

Given data:-

width of beam 300mm

Effective depth = 450 m.m

Effective cover = 40 m.m.

$A_{sc} = 3 \times \frac{\pi}{4} \times 12^2 = 339.29 \, mm^2$

$A_{st} = 5 \times \frac{\pi}{4} \times 20^2 = 1570.79 = 157 \, mm^2$

M20 grade $f_{ck} = 20 \, N/mm^2$

Fe250 $f_y = 250 \, N/mm^2$

$\frac{d'}{d} = \frac{40}{450} = 0.08 \simeq 0.1$

$f_{sc} = 217\ N/mm^2$

Step-1

To find out depth of N.A

$0.36 f_{ck} b x_u + f_{sc} A_{sc} = 0.87 f_y A_{st}$

$\Rightarrow 0.36 \times 20 \times 300 x_u + 217 \times 339.29 = 0.87 \times 250 \times 1571$

$\Rightarrow 2160 x_u + 73625.93 = 341692.5$

$\Rightarrow 2160 x_u = 341692.5 - 73625.93$

$\Rightarrow x_u = \frac{268066.57}{2160} = 124.10\ mm$

$x_{umax} = 0.53d = 0.53 \times 450 = 238.5\ mm$

$x_u < x_{umax}$ so th beam is underreinforced section.

Step-2

$M_u = 0.36 f_{ck} b x_u (d - 0.42 x_u) + A_{sc} f_{sc} (d - d')$

$= 0.36 \times 20 \times 300 \times 124.10 (450 - 0.42 \times 124.10) + 339.29 \times 217 (450 - 40)$

$= 136840216.5\ Nm$

$= 136.8\ kNm$

$\frac{d'}{d} = \frac{40}{450} = 0.08 \simeq 0.1$

$f_{sc} = 217\ N/mm^2$

Step-1

To find out depth of N.A

$0.36 f_{ck} b x_u + f_{sc} A_{sc} = 0.87 f_y A_{st}$

$\Rightarrow 0.36 \times 20 \times 300 x_u + 217 \times 339.29 = 0.87 \times 250 \times 1571$

$\Rightarrow 2160 x_u + 73625.93 = 341692.5$

$\Rightarrow 2160 x_u = 341692.5 - 73625.93$

$\Rightarrow x_u = \frac{268066.57}{2160} = 124.10\ mm$

$x_{umax} = 0.53d = 0.53 \times 450 = 238.5\ mm$

$x_u < x_{umax}$ so the beam is underreinforced section.

Step-2

$M_u = 0.36 f_{ck} b x_u (d - 0.42 x_u) + A_{sc} f_{sc} (d - d')$

$= 0.36 \times 20 \times 300 \times 124.10 (450 - 0.42 \times 124.10) + 339.29 \times 217 (450 - 40)$

$= 136840216.5\ Nm$

$= 136.8\ kNm$

$= 268$ KNm

$x_u > x_{u\,limit}$ so the beam design as doubly reinforced beam.

$\frac{d'}{d} = \frac{50}{500} = 0.1$ $f_{sc} = 217$ N/mm²

$$A_{st\,limit} = \frac{M_{u\,limit}}{0.87 f_y (d - 0.42 x_{u\,max})}$$

$x_{u\,max} = 0.53 \times 550 = 291.5$ mm

$$A_{st\,limi} = \frac{268 \times 10^6}{0.87 \times 250 (550 - 0.42 \times 291.5)}$$

$= 2881.82$ mm²

$M_u = M_{u\,limit} + M_{u2}$

$\Rightarrow M_{u2} = M_u - M_{u\,limi}$

$= 656 - 268 = 388$ KNm

$$A_{sc} = \frac{M_{u2}}{f_{sc}(d - d')} = \left(\frac{388 \times 10^6}{217(550 - 50)}\right)$$

$= 3576$ mm²

$$A_{st2} = \frac{A_{sc} f_{sc}}{0.87 f_y} = \frac{3756 \times 217}{0.87 \times 250} = 3568 \text{ mm}^2$$

$A_{st} = A_{st\,lim} + A_{st2} = 6449.82$ mm²

$A_{sc} = 3576$ mm² provide 6 bar 30 ϕ

$A_{sc} = 6 \times \frac{\pi}{4} \times 30^2 = 4241.15$ mm²

12 June 2021 0.5.M

Q. Design rectangular beam for an effective span of 8mt The super-imposed Load is 50 kN/m & size of the beam is 300mm X550mm an effective depth use M20 grade concrete & Fe250 steel.

Soln given data :-

width of beam (b) = 300mm

Effective depth (d) = 550mm

d' = 50mm

super imposed load = 50 kN/m

span length = 8mt

fck = 20 N/mm²

fy = 250 N/mm²

Soln super imposed load = 50 kN/mm

Self wt of beam = b×D×25

= 0.3×0.6×25 = 4.5 kN/m

D = 550+50 = 600mm

Total load = 50+4.5 = 54.5 kN/m

factored load = 1.5×54.5 = 81.75 kN/m

= 82 kN/m

factored moment = $\frac{wl^2}{8}$ = $\frac{82\times8^2}{8}$

= 656 kNm

Step 1

Mulimit = 0.148 fck bd²

= 0.148×20×300×550²

$= 268$ KNm

$x_u > x_{u\,limit}$ so the beam design as doubly reinforced beam.

$\frac{d'}{d} = \frac{50}{500} = 0.1$ $f_{sc} = 217$ N/mm²

$$A_{st\,limit} = \frac{M_{u\,limit}}{0.87 f_y (d - 0.42 x_{u\,max})}$$

$x_{u\,max} = 0.53 \times 550 = 291.5$ mm

$$A_{st\,limi} = \frac{268 \times 10^6}{0.87 \times 250 (550 - 0.42 \times 291.5)}$$

$= 2881.82$ mm²

$M_u = M_{u\,limit} + M_{u2}$

$\Rightarrow M_{u2} = M_u - M_{u\,limi}$

$= 656 - 268 = 388$ KNm

$$A_{sc} = \frac{M_{u2}}{f_{sc}(d - d')} = \left(\frac{388 \times 10^6}{217(550 - 50)}\right)$$

$= 3576$ mm²

$$A_{st2} = \frac{A_{sc} f_{sc}}{0.87 f_y} = \frac{3756 \times 217}{0.87 \times 250} = 3568 \text{ mm}^2$$

$A_{st} = A_{st\,lim} + A_{st2} = 6449.82$ mm²

$A_{sc} = 3576$ mm² provide 6 bar 30 ϕ

$A_{sc} = 6 \times \frac{\pi}{4} \times 30^2 = 4241.15$ mm²

$A_{st} = 6449.82 mm^2$ provide 7 bar 35 ϕ

$A_{st} = 7 \times \frac{\pi}{4} \times 35^2 = 6734.78 \ mm^2$

Step-2:

$0.36 \times f_{ck} \times b x_u + f_{sc} \times A_{sc} = 0.87 f_y A_{st}$

$= 0.36 \times 20 \times 300 x_u + 217 \times 4241.15 = 0.87 \times 250 \times 6734.78$

$= 2160 x_u + 920329.55 = 1464814.65$

$= 2160 x_u = \frac{544485.1}{2160}$

$x_u = 252.07 mm$

$x_{umax} > x_u$ so the beam is under reinforced section.

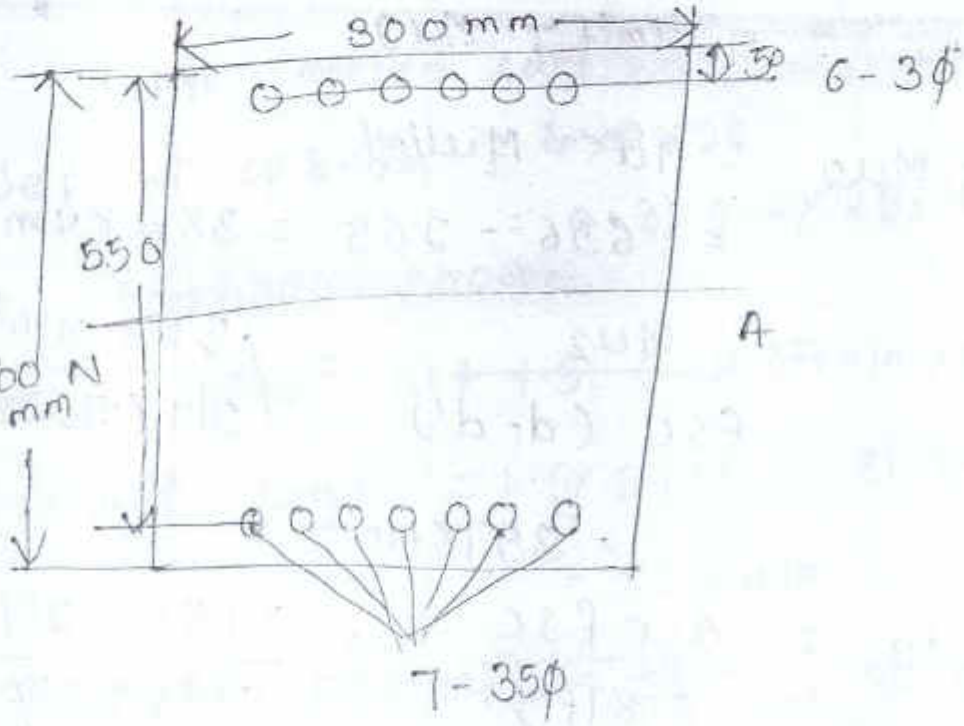

$$Asc = \frac{Mu_2}{FSC(d-d')} = \frac{181.4 \times 10^6}{217(550-50)}$$

$$= 1671.88 \ mm^2$$

$$Ast_2 = \frac{Asc \times FSC}{0.87 \times fy} = \frac{1671.88 \times 217}{0.87 \times 250}$$

$$= 1668.03 \ mm^2$$

$$Ast\,limit = \frac{Mu\,limit}{0.87 fy\,(d - 0.42\,xu\,max)}$$

$$xu\,max = 0.53 \times 550$$

$$= 291.5 \ mm$$

$$= \frac{268.6 \times 10^6}{0.87 \times 250 \times (550 - 0.42 \times 291.5)}$$

$$= 2888.28 \ mm^2$$

$$Ast = Ast\,limit + Ast_2$$

$$= 2888.28 + 1668.03 = 4556.31 \ mm^2$$

$Asc = 1671.88$ provide 4 bar 24 dia

$Asc = 4 \times \frac{\pi}{4} \times 24^2 = 1809 \ mm^2$

$Ast = 4556.31$ provide 5 bar 35 dia

$Ast = 5 \times \frac{\pi}{4} \times 35^2 = 4810.56 \ mm^2$

Step: 2

To find x_u

$0.36 f_{ck} b x_u + f_{sc} A_{sc} = 0.87 f_y A_{st}$

$\Rightarrow 0.36 \times 20 \times 300 x_u + 217 \times 1809 = 0.87 \times 250 \times 4810.56$

$\Rightarrow 2160 x_u + 392553 = 1046296.8$

$\Rightarrow 2160 x_u = 1046296.8 - 392553$

$\Rightarrow x_u = \frac{653743.8}{2160} = 302 mm$

$x_{umax} = 291.5 mm$

$x_u > x_{umax}$. the beam is over reinforced section.

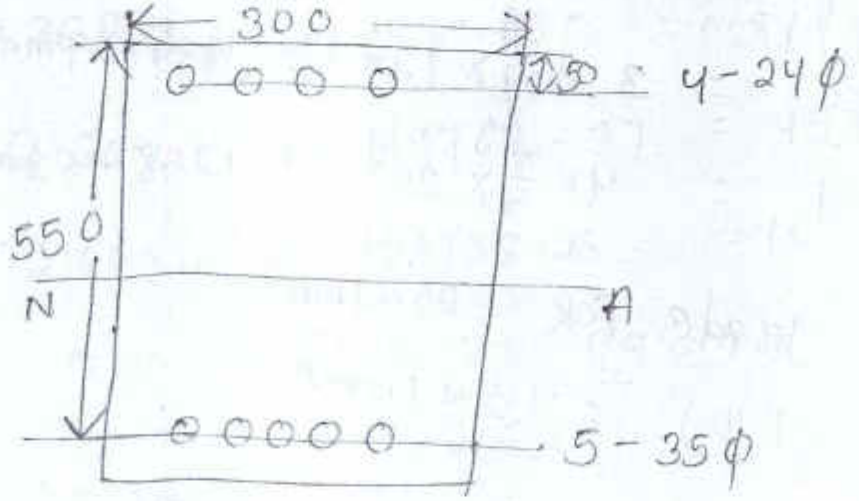

19 Jun 2021

2A A doubly reinforced conc beam having rectangular section 300 mm x 540 mm overall depth is reinforced with 3 bars of 12 mm dia in compression side & 4 bars 20 mm dia at tension side. The effective cover to bars is 40mm. use M20 grade concrete & HYSD reinforced. Calculate flexural strength of the section.

Soln

Width of beam (b) = 300mm

Overall depth (D) = 540mm

Effective cover (d') = 40mm

Effective depth (d) = D - d' = 540 - 40

= 500mm

$A_{sc} = 3 \times \frac{\pi}{4} \times 12^2 = 339.29 \, mm^2$

$A_{st} = 4 \times \frac{\pi}{4} \times 20^2 = 1256.63 \, mm^2$

M20 grade $f_{ck} = 20 \, N/mm^2$

$(f_y) = 415 \, N/mm^2$

$\frac{d'}{d} = \frac{40}{500} = 0.08 = 0.1$

$f_{sc} = 353 \, N/mm^2$

Step-1

$$Ast_2 = \frac{fsc\ Asc}{0.87 fy} = \frac{353 \times 339.29}{0.87 \times 415}$$

$$= 332 mm^2$$

$$Ast_1 = Ast - Ast_2$$

$$= 1256.63 - 332 = 924.63 mm^2$$

Step-2

$$Mulimit = 0.138 fck\ bd^2$$

$$= 0.138 \times 20 \times 300 \times 500^2$$

$$= 207\ kNm$$

$$xumax = 0.48d = 0.48 \times 500 = 240 mm$$

To find (xu)

$$0.36 fck\ b xu + fsc\ Asc = 0.87 fy Ast$$

$$= 2160 xu + 119769.37 = 453706.26$$

$$= 2160 xu = 453706.26 = 119769.37$$

$$= xu = \frac{453706.26 - 119769.37}{2160}$$

$$= 154.6\ mm$$

$xu < xumax$ so the beam is under reinforced section.

$M_u = 0.36 f_{ck} b x_u (d - 0.42 x_u) + A_{sc} f_{sc} (d - d')$

$= 0.36 \times 20 \times 300 \times 154.6 (500 - 0.42 \times 154.6) +$

$339.29 \times 353 (500 - 40)$

$= 200$ KNm

Design of Shear

Shear force is present in beams where there is a change in bending moment along the span it is equal to the rate of change of bending moment. So several experimental studies have been conducted to understand the various modes of failure, which ~~of the~~ occure due to possible combination of bending moment acting at a given section of shear &

These modes are as follows :-

(i) Diagonal tension failure
(ii) Flexural shear failure
(iii) Diagonal compression failure

(i) Diagonal tension failure :-

Diagonal tension failure which occurs under large shear force and less bending moment. Such cracks are normally at 45° with the horizontal.

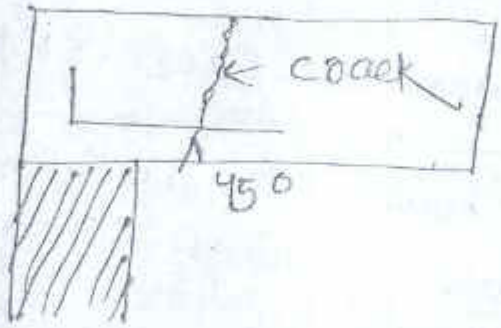

(II) Flexural shear failure

Flexural shear failure which occures under large bending moment & less shear force. Such cracks are normally at 90^0 with the horizontal.

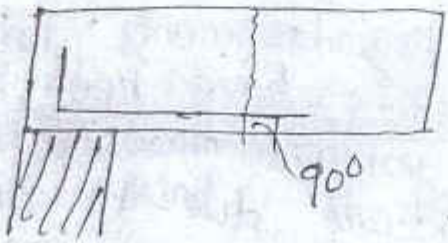

(III) Diagonal Compression failure

Diagonal compression failure which occures under large shear force as shown in fig. Normally it occures in beams which are reinforced against heavy shear.

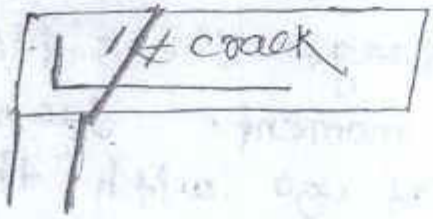

23 Jun 2021

Ultimate nominal stress (τ_v)

For a beam of uniform depth, the ultimate nominal shear stress τ_v is given by

$$\boxed{\tau_v = \frac{V_u}{bd}}$$ (page - 72)

where,

V_u = factored shear force due to load

Shear reinforcement in beam :-

The shear reinforcement is made by any of the following forms.

(i) vertical stirrup

(ii) Inclined stirrup (not less than 45°)

(iii) Bent up bar along with stirrup

Type of stirrup :-

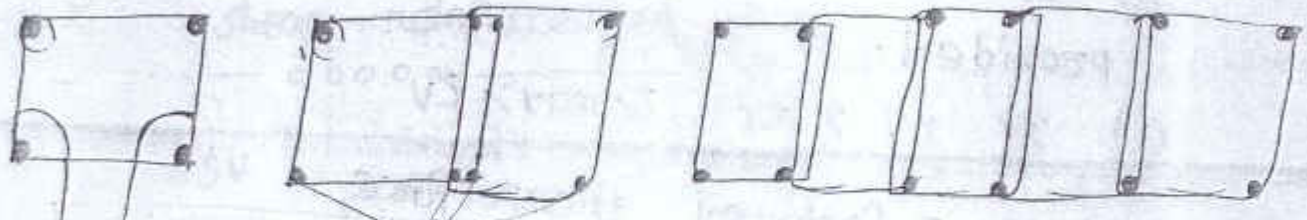

Two legged stirrup

Four legged stirrup

Six-legged stirrup

Bent up reinforcement to resist shear

Bent up bars along with stirrups must be used to resist shear. The shear resistance provided by bent up bars shouldn't be taken more than 50% of the total shear reinforcement required.

Design shear strength of conc. (τ_c)

(a) Without shear reinforcement The design shear strength 'τ_c' of conc. in beam without shear reinforcement.

(Code book - page no - 73 table no - 19)

(b) With shear reinforcement

---

under no circumstances with shear reinforcement shall the nominal shear stress in beam exceeds $\tau_{c\,max}$

(page - 73 , table no - 20)

24 June 2021

NOTE :-

(i) If $\tau_v < \tau_c$, min^m shear reinforcement provided.

(ii) If $\tau_v > \tau_c$, $\tau_{c\,max} > \tau_v$

Let V_u = factored shear force

Shear resistance of conc. $\boxed{(V_c) = \tau_c b d}$

Net shear to be resisted by shear reinforcement $= \boxed{V_{us} = V_u - V_c}$

The strength of shear reinforcement V_{us} shall be calculated.

(i) For vertical stirrup

$$V_{us} = \frac{0.87 f_y A_{sv} d}{S_v}$$

(ii) For inclined stirrup

$$V_{us} = \frac{0.87 f_y A_{sv} d}{S_v} (\sin\alpha + \cos\alpha)$$

(iii) For single bar or singly group of parallel bars, all bent up at the same cross section (c)

$$V_{us} = 0.87 f_y A_{sv} \sin\alpha$$

where, A_{sv} = total cross-sectional area of stirrup legs effective.

S_v = stirrup spacing along the length of the member.

α = Agle between inclined stirrup or bent up bar.

Min^m shear reinforcement

$$\frac{A_{sv}}{b s_v} = \frac{0.4}{0.87 f_y}$$

$$\Rightarrow s_v = \frac{A_{sv}\, 0.87 f_y}{0.4 b}$$

Max^m spacing of shear reinforcement

p shall'n't be exceed

(i) 300 mm

(ii) 0.75d

1Q A simply supported reinforced concrete beam is 250 mm wide & 500 mm effective depth & is reinforced with 5 bars of 18 mm as tensile steel. If the beam is subjected to factored shear of 62.5 kN at the support. Find the nominal shear stress at the supported & design shear reinforcement use M20 grade concrete & Fe 415 steel.

Sol^n Given data :-

width of the beam = 250mm

Effective depth = 500 mm

$A_{st} = 5 \times \frac{\pi}{4} \times 18^2 = 1272.34 \ mm^2$

Factored shear $V_u = 62.5$ kN

M20 grade $f_{ck} = 20 \ N/mm^2$

Fe 415 $f_y = 415 \ N/mm^2$

Step-1

Nominal shear stress $(\tau_v) = \frac{V_u}{bd}$

$= \frac{62.5 \times 10^3}{250 \times 500} = 0.5 \ N/mm^2$

Step-2 % of steel $= \frac{1272.34}{250 \times 500} \times 100 = 1\%$

Step-III

For 1% steel, $\tau_c = 0.62\ N/mm^2$

$\tau_v < \tau_c$ so minimum shear reinforcement is provided.

Provide 6mm ϕ mild steel bars for stirrup of 2 legged stirrup.

$$S_v = \frac{0.87 f_y A_{sv}}{0.4b}$$

$$= \frac{0.87 \times 250 \times (2 \times \frac{\pi}{4} \times 6^2)}{0.4 \times 250}$$

$$= 123.688\ mm$$

S_v shall not be exceed

(i) 300 m.m

(ii) $0.75d = 0.75 \times 500 = 375mm$

Provide two legged 6mm ϕ stirrup

(or) 123 mm c/c.